FILLMORE HIGH SCHOOL - CTE BUILDINGS
FILLMORE, CALIFORNIA

FIRE SPRINKLER SYSTEM

DSA BUILDING SYSTEM GENERAL NOTES

1. 2016 NFPA 13, 8.16.4.1.1: THE DESIGNER SHALL INDICATE ON THE PLANS ALL PIPING SUBJECT TO FREEZING（WHERE WATER TEMPERATURE CAN NOT BE MAINTAINED ABOUT 40 DEGREES FAHRENHEIT）AND PROVIDE APPROVED PROTECTION.
2. 2016 NFPA 13, 10.10.2.1.1: UNDERGROUND MAINS AND LEAD-IN CONNECTIONS TO SYSTEM RISERS SHALL BE COMPLETELY FLUSHED BEFORE CONNECTION IS MADE TO OVERHEAD SPRINKLER PIPING. WHERE UNDERGROUND PIPING IS FLUSHED AND NOT IMMEDIATELY CONNECTED TO OVERHEAD PIPING, THE RISER SHALL BE CAPPED OR OTHERWISE PROTECTED TO PREVENT DEBRIS, DIRT, OR ANIMALS FROM ENTERING INTO THE UNDERGROUND PIPING（WITNESSED BY THE PROJECT INSPECTOR）.
3. CERTIFIED OR WET-SIGNED WATER FLOW TEST DATA SHALL BE NO MORE THAN 12 MONTHS OLD AT THE TIME OF SUBMITTAL AND INDICATE THE LOCATIONS AND HEIGHT ELEVATIONS OF THE TEST AND RESIDUAL FLOW HYDRANTS, WATER FLOW TEST DATA MUCH BE PROVIDED BY OR WITNESSED BY THE LOCAL WATER PURVEYOR, UTILITIES COMPANY, OR LOCAL FIRE DEPARTMENT.
4. 2016 NFPA 13 FIGURE 10.10.1: A COPY OF COMPLETED AND SIGNED "CONTRACTOR'S MATERIALS & TEST CERTIFICATE FOR UNDERGROUND PIPING" SHALL BE INCLUDED IN THE CLOSE-OUT DOCUMENTS FOR BUILDING SYSTEM.
5. 2016 NFPA 13, 10.10.2.2.1: ALL PIPING AND ATTACHED APPURTENANCES SUBJECTED TO SYSTEM WORKING PRESSURE SHALL BE HYDROSTATICALLY TESTED AT 200 PSI, OR 50 PSI IN EXCESS OF THE SYSTEM WORKING PRESSURE, WHICHEVER IS GREATER, AND SHALL MAINTAIN THAT PRESSURE WITHOUT LOSS FOR 2 HOURS.（WITNESSED BY PROJECT INSPECTOR）.
6. 2016 NFPA 13, 6.2.9.1: PROVIDE SUPPLY OF SPARE SPRINKLERS IN A PROTECTIVE CABINET, INCLUDING SPRINKLER WRENCH FOR EACH TYPE INSTALLED. SUPPLY SHALL BE NO FEWER THAN 6 SPARE SPRINKLERS MATCHING THE TYPES AND TEMPERATURES RATING IN EACH PROTECTED AREA FOR SYSTEMS LESS THAN 300 SPRINKLERS.（12 SPARE SPRINKLER HEADS FOR SYSTEMS 300 TO 1000 SPRINKLERS.）
7. 2016 NFPA 13, 9.3.6.1: FURNISH RESTRAINT OF BRANCH LINES. THE END SPRINKLER ON EACH LINE SHALL BE RESTRAINED AGAINST EXCESSIVE VERTICAL AND LATERAL MOVEMENT.（9.3.6.3）. BRANCH LINES SHALL BE LATERALLY RESTRAINED AT INTERVALS NOT EXCEEDING THOSE SPECIFIED IN Table 9.3.6.4（a）and（b）（9.3.6.4）.
8. 2016 CBC 903.4.2 AND NFPA 13 8.17.4.2.3: THE INSPECTORS TEST VALVE LOCATION SHALL BE ACCESSIBLE. THE PIPE SHALL BE NO LESS THAN 1 INCH, WITH A SMOOTH BORE, CORROSION- RESISTANT ORIFICE, PROVIDING THE EQUIVALENT FLOW OR THE SMALLEST ORIFICE OF THE SPRINKLER TYPES INSTALLED WITHIN THE SYSTEM. THE DISCHARGE SHALL BE TO A DRAIN CONNECTION OR AN APPROVED LOCATION AT THE EXTERIOR OF THE BUILDING.
9. THE SPRINKLER FLOW SWITCH SHALL BE TESTED TO CONFIRM THAT WHEN THE INSPECTOR'S TEST VALVE IS ACTIVATED AN ALARM WILL SOUND NO MORE THAN 90 SECONDS AFTER INITIAL FLOW（WITNESSED BY THE PROJECT INSPECTOR）
10. 2016 CBC 904.4.2: CONNECTIONS TO PROTECTED PREMISES AND SUPERVISING STATION FIRE ALARM SYSTEMS SHALL BE TESTED TO VERIFY PROPER IDENTIFICATION AND TRANSMISSION OF ALARMS FROM AUTOMATIC FIRE EXTINGUISHING SYSTEMS（WITNESSED BY PROJECT INSPECTOR）
11. 2016 NFPA 13 SEC 25.6.1.1: SIGNAGE SHALL BE PROVIDED AS REQUIRED, INCLUDING RISER ROOM IDENTIFICATION.
12. 2016 CBC SEC 903.4.1: THE MAIN FIRE ALARM PANEL VALVE MONITORING AND WATER FLOW ALARM AND TROUBLE SIGNALS SHALL BE DISTINCTLY DIFFERENT AND SHALL BE AUTOMATICALLY TRANSMITTED TO AN APPROVED CENTRAL STATION MONITORING COMPANY.
13. 2016 NFPA 13 SEC 25.5.1: A PERMANENT HYDRAULIC CALCULATIONS DESIGN DATA PLACARD SHALL BE ATTACHED TO EACH RISER.
14. 2016 NFPA 13 SEC 6.9.1.AND 2016 CBC 903.4.2: FLOW SWITCH SHALL BE CONNECTED TO A 10 INCH OUTSIDE ALARM BELL OR OTHER AUDIBLE ALARM DEVICE AT EACH RISER. APPROVED IDENTIFICATION SIGNS SHALL BE PROVIDED ON THE OUTSIDE ALARM BELL, SPRINKLER FIRE ALARM- WHEN ALARM SOUNDS CALL 911/ FIRE DEPARTMENT.
15. TITLE 19 ARTICLE 906（A）: A LABEL OF THE SELF-ADHESIVE TYPE SHALL BE PLACED ON THE FIRE DEPARTMENT CONNECTION OR ON THE RISER FOR FIRE SPRINKLER SYSTEM AND SHALL INCLUDE THE DATA OF INSTALLATION AND/ OR DATE SERVICE WAS PERFORMED AND LICENSE NUMBER OF PERSON PERFORMING SERVICE WORK.
16. 2016 NFPA 13 FIGURE 25.1: INSTALLING CONTRACTOR SHALL COMPLETE AND SIGN CONTRACTOR'S MATERIAL & TEST CERTIFICATE FOR THE ABOVEGROUND PIPING. THIS FORM SHALL BE GIVEN TO THE PROJECT INSPECTOR WHO WILL FORWARD TO DSA FOR FILING IN PROJECT RECORDS.

WATER DEPARTMENT NOTES

1. ARRANGEMENT OF FIRE PROTECTION WATER SUPPLY AND DEVICES SHALL STRICTLY CONFORM TO THE REQUIREMENTS OF CITY OF FILLMORE WATER DEPARTMENT.
2. BACKFLOW PREVENTION DEVICE TO BE REDUCED PRESSURE DETECTOR ASSEMBLY（RPDA）. ASSEMBLY SHALL BE FURNISHED WITH 2 U.L. LISTED BUTTERFLY GATE VALVES, EQUIPPED WITH APPROVED TAMPER SWITCHES. BACKFLOW ASSEMBLY SHALL BE UL, CLASSIFIED, AND AWWA APPROVED FOR FIRE SERVICE INSTALLATIONS AND LISTED BY THE CROSS-CONNECTION INSTITUTE AT THE UNIVERSITY OF SOUTHERN CALIFORNIA.
3. BACKFLOW PREVENTION ASSEMBLY SHALL BE TESTED UPON INSTALLATION BY ACERTIFIED BACKFLOW TECHNICIAN. PRIOR TO ACCEPTANCE OF BACKFLOW ASSEMBLY BY THE WATER DEPARTMENT.
4. CONTRACTOR SHALL FURNISH VALVE SUPPORT STANDS AS REQUIRED AND SHALL MAINTAIN ALL INSTALLATION CLEARANCES AND HEIGHTS AS SHOWN ON THE DRAWINGS AND STANDARD DETAILS FO THE SERVING WATER DEPARTMENT.
5. CONCRETE SLAB TO BE MINIMUM 4" THICK AND SLOPED TO DRAIN. PAD ELEVATION TO BE 1" ABOVE FINISH GRADE IN LAWN AREAS AND 2" ABOVE FINISH GRADE IN ALL OTHER AREAS. OVERALL ALL DIMENSIONS OF PAD SHALL BE AS SHOWN ON THE DRAWINGS AND STANDARD DETAILS FO THE SERVING WATER AND FIRE DEPARTMENTS.

COORDINATION NOTES

1. INSTALLING CONTRACTOR SHALL PREPARE A SHOP DRAWING SUBMITTAL PRIOR TO START OF WORK. THE FIRE SPRINKLER SYSTEM SUBMITTAL SHALL INCLUDE WORKING PLANS IN ACCORDANCE WITH NFPA13 SECTION 23.1 AND SUBMITTAL GUIDELINES OF THE AUTHORITY HAVING JURISDICTION（AHJ）. DEVIATION FROM APPROVED PLANS SHALL REQUIRE PERMISSION OF THE AHJ PER NFPA 13, 23.1.2.
2. CONFIGURATION OF PIPING AND SPRINKLERS SHOWN ON THESE PLANS SHALL BE USED AS A BASIS FOR LAYOUT AND INSTALLATION. CHANGES IN ELEVATION SHALL BE UNDERTAKEN BY THE INSTALLING CONTRACTOR AS REQUIRED TO EFFECT COORDINATION WITH OTHER TRADES AND/OR MAINTAIN PROPER CLEARANCES. ALL SUCH REVISIONS SHALL BE SHOWN ON CONTRACTOR'S WORKING PLANS.
3. ALL DIMENSIONS SHOWN ON THESE PLANS ARE CENTERLINE-TO-CENTERLINE. INSTALLING CONTRACTOR SHALL INSPECT AND CONFIRM THE ACTUAL AS-BUILT CONDITIONS OF ALL WORK AREAS AND SHALL COORDINATE THE INSTALLATION OF FIXED FIRE PROTECTION SYSTEMS WITH ALL WORK BY OTHER TRADES.
   - A. THE EXACT LOCATION AND ELEVATION OF INSTALLED PIPING AND THE CUT LENGTHS OF ALL PIPING AND HANGERS SHALL BE THE RESPONSIBILITY OF THE INSTALLING CONTRACTOR.
   - B. INSTALLING CONTRACTOR SHALL COORDINATE THE INSTALLATION WITH OBSTRUCTIONS SUCH AS STRUCTURE, DUCTWORK, CABLE TRAYS AND OTHER SUCH BUILDING UTILITY SYSTEMS AND WORK BY OTHER TRADES.
   - C. WHERE FIELD CONFLICTS REQUIRE THAT PIPING BE REVISED, SUCH CHANGES SHALL BE INCLUDED IN CONTRACTOR'S WORKING PLANS AND SUBMITTED TO ARCHITECT FOR REVIEW, TO ASSURE CONFORMANCE TO APPROVED DESIGN.
   - D. CONTRACTOR SHALL NOT SUBMIT COPIES OF APPROVED CONSTRUCTION DOCUMENTS PRIOR TO COORDINATION OR IN LIEU OF COORDINATED WORKING PLANS.
4. WHERE PENDENT SPRINKLERS ARE SHOWN IN OR NEAR THE EXACT CENTER OF SUSPENDED CEILING TILES, CONTRACTOR SHALL BE CONFIRM THE ACTUAL TILE PATTERN AND SPRINKLER LOCATIONS, SO THAT THE FINAL INSTALLATION IS EXACTLY CENTERED. WHERE CEILING TILES ARE 2'X4' "SECOND LOOK" TYPE WITH 2'X2' MODULES, SPRINKLERS SHALL BE SHALL BE IN THE EXACT CENTER OF THE 2'X2' MODULE. WHERE CEILING TILES ARE CONVENTIONAL 2'X4', SPRINKLERS SHALL BE CENTERED IN THE 2' DIRECTION AND SHALL BE LOCATED AT LEAST 6" CLEAR FROM ANY T-BAR.
5. CONTRACTOR SHALL FURNISH AND COORDINATE CONNECTION POINTS BETWEEN FIRE SPRINKLER SYSTEM SIGNALING DEVICES AND THE FIRE DETECTION AND ALARM SYSTEM. THIS SHALL INCLUDE BUT IS NOT LIMITED TO THE LOCATION OF ALL BELLS AND HORNS, FLOW SWITCHES AND TAMPER SWITCHES REQUIRING CONNECTION TO THE FIRE ALARM AND SUPERVISORY SYSTEMS.
6. CONTRACTOR SHALL UNDERTAKE MEETINGS AND CORRESPONDENCE WITH ALL AGENCIES HAVING JURISDICTION, AS REQUIRED TO CONFIRM SPECIFIC REQUIREMENTS REGARDING LOCATIONS AND METHODS OF DISCHARGING WATER FROM TEST AND DRAIN LOCATIONS. WHERE SHOWN ON PLANS, ALL WASTEWATER SHALL DISCHARGE INTO DEDICATED RECEPTORS AND BE COORDINATED WITH THE PLUMBING AND SEWER DESIGNS.

DESIGN NOTES

1. SPRINKLERS
A. LOCATION: DA-01
   HAZARD GROUP: ORDINARY HAZARD GROUP II
   DISCHARGE DENSITY: .20
   QR AREA REDUCTION: NO
   HOSE STREAM ALLOWANCE
   OUTSIDE: 250
   INSIDE: 0
   COMBINED: 250

B. LOCATION: DA-02
   HAZARD GROUP: ORDINARY HAZARD II
   DISCHARGE DENSITY: .20
   QR AREA REDUCTION: YES
   HOSE STREAM ALLOWANCE
   OUTSIDE: 250
   INSIDE: 0
   COMBINED: 250

B. LOCATION: DA-03
   HAZARD GROUP: LIGHT HAZARD
   DISCHARGE DENSITY: .10
   QR AREA REDUCTION: YES
   HOSE STREAM ALLOWANCE
   OUTSIDE: 100
   INSIDE: 0
   COMBINED: 100

A. CONSTRUCTION CLASSIFICATION
   TYPE: OBSTRUCTED UNOBSTRUCTED / COMBUSTIBLE NON-COMBUSTIBLE
   DEFLECTOR DISTANCE:

2. UNDERGROUND PIPE TYPES (SEE PIPE TABLES)
A. UNDERGROUND MAINS: C-900 PVC, CLASS 200
B. UNDERGROUND TRANSITIONS THROUGH WALLS AND UNDER FOOTINGS:
   AWWA C151 DUCTILE IRON, CLASS 350 OR TYPE 304 STAINLESS STEEL

3. BUILDING SYSTEM PIPE TYPES (SEE PIPE TABLES)
A. MAIN PIPING: BLACK STEEL, SCHEDULE 10
   FITTINGS: GROOVED/WELDED
B. BRANCH PIPING: BLACK STEEL, SCHEDULE 40
   FITTINGS: THREADED CAST/MALLEABLE IRON

4. SEE SPRINKLER LEGEND ON PLANS FOR SPACING OF SPRINKLERS AND FINISHES

FIRE LEGEND

SYMBOL	ABBR	DESCRIPTION
		NEW PIPING
		EXISTING PIPING
		EXISTING PIPING TO BE REMOVED
		PIPE HANGER LOCATION
		PIPE HANGER RESTRAINT
		FLANGED CONNECTION
		"RIDGID" GRV COUPLING
		"FLEXIBLE" GRV COUPLING
		SCREWED CAP
#2(1'-2")		FIRE HYDRANT HANGER TYPE AND LENGTH
		SCREWED PLUG
	2-WAY	2-WAY SEISMIC BRACE
	4-WAY	4-WAY SEISMIC BRACE
	FDC	FIRE DEPT. CONN.
	TB	UNDERGROUND THRUST BLOCK
	RS	FIRE SPRINKLER RISER
		FIRE ALARM BELL
T		TAMPER SWITCH
		KEY VALVE
CL-900 AFF		PIPING ELEVATION
1		HYDRAULIC REF. POINT
L01		BRANCH LINE NUMBER
P01		WELDED BRANCH LINE PIECE NO.
M01		WELDED MAIN PIECE NO.
		WALL PENETRATION SLEEVE
	PIV/FDC	POST INDICATING VALVE W/ FIRE DEPT CONNECTION
	BFP	BACK FLOW PREVENTER

ABBREVIATIONS

AHJ	AUTHORITY HAVING JURISDICTION
AWWA	AMERICAN WATER WORKS ASSOCIATION
BFP	BACK FLOW PREVENTER
CBC	CALIFORNIA BUILDING CODE
CFC	CALIFORNIA FIRE CODE
CPVC	CHLORINATED POLYVINYL CHLORIDE
DSA	DIVISION OF THE STATE ARCHITECT
FDC	FIRE DEPARTMENT CONNECTION
FM	FACTORY MUTUAL
IBC	INTERNATIONAL BUILDING CODE
N.F.P.A.	NATIONAL FIRE PROTECTION ASSOCIATION
PVC	POLYVINYL CHLORIDE
PIV	POST INDICATOR VALVE
PSI	PRESSURE PER SQUARE INCH
RPDA	REDUCED PRESSURE DETECTOR ASSEMBLY
SQ. IN.	SQUARE INCHES
SQ. FT.	SQUARE FEET
UL	UNDERWRITES LABRATORY

GENERAL CODE DATA

GOVERNING CODES:
BUILDING CODE: CALIFORNIA BUILDING CODE, 2016 ED.
FIRE CODE: CALIFORNIA FIRE CODE, 2016 ED

BLDG A:

TYPE OF CONSTRUCTION: TYPE -

FIRE SPRINKLERED IN LIEU OF RATED CONSTRUCTION: NO

NUMBER OF STORIES: 1

BUILDING HEIGHT: 26' - 0"

OCCUPANCY CLASS: GROUP E

TOTAL PROJECT AREA: 8, 513 SQ. FT.

BLDG B:

TYPE OF CONSTRUCTION: TYPE -

FIRE SPRINKLERED IN LIEU OF RATED CONSTRUCTION:

NUMBER OF STORIES:

BUILDING HEIGHT: 33' - 10"

OCCUPANCY CLASS: GROUP E
FIRST FLOOR 8, 750 SQ. FT.
SECOND FLOOR 3, 937 SQ. FT.
TOTAL PROJECT AREA: 12, 687 SQ. FT.

SCOPE OF WORK

FURNISH NEW FIRE SPRINKLER SYSTEM PER N.F.P.A. 13 2016 FOR THE CTE BUILDINGS "A" & "B" AT FILLMORE HIGH SCHOOL.

WATER FLOW DATA

LOCATION: 532 1st STREET FILLMORE, CA

TIME: 13:00 DATE TAKEN: 12/12/2018

PITOT PSI: 40 REF. ELEV: 491'-1"

STATIC PSI: 90 FLOW GPM: 825

RESIDUAL PSI: 62 PORT: N/A

FURNISHED BY: CITY OF FILLMORE FIRE DEPARTMENT

TAKEN BY: BOB THOMPSON

PIPE TABLES

C900, CLASS 150 PVC PIPE ID

NOMINAL	ACTUAL
4"	4.23
6"	6.09
8"	7.98
10"	9.79
12"	11.65

C151, CLASS 350 DUCTILE IRON PIPE ID

NOMINAL	ACTUAL
4"	4.300
6"	6.400
8"	8.550
10"	10.580
12"	12.640

SCH. 40 PIPE ID

NOMINAL	ACTUAL
3/4"	.0824"
1"	1.049
1-1/4"	1.380
1-1/2"	1.610
2"	2.067
2-1/2"	2.469
3"	3.068
3-1/2"	3.548
4"	4.026
5"	5.047
6"	6.065
8"	7.981

SCH. 10 PIPE ID

NOMINAL	ACTUAL
1"	1.097
1-1/4"	1.442
1-1/2"	1.682
2"	2.157
2-1/2"	2.635
3"	3.260
3-1/2"	3.760
4"	4.260
5"	5.295
6"	6.357
8"	8.249
10"	10.370

VICINITY MAP

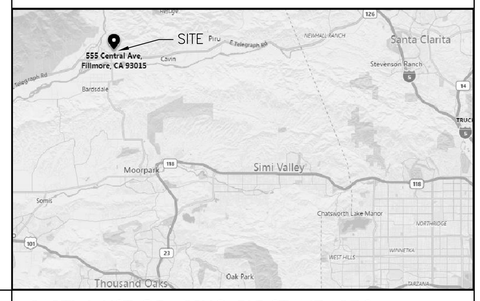

PARTIAL LIST OF APPLICABLE STANDARDS:

2016 California Building Code（for SFM）Referenced Standards Chapter 35

NFPA 13	Automatic Sprinkler Systems（California Amended）	2016 Edition
NFPA 14	Standpipe Systems（California Amended）	2013 Edition
NFPA 17	Dry Chemical Extinguishing Systems	2013 Edition
NFPA 17A	Wet Chemical Extinguishing Systems	2013 Edition
NFPA 20	Stationary Pumps	2016 Edition
NFPA 24	Private Fire Service Mains（California Amended）	2016 Edition
NFPA 72	National Fire Alarm and Signaling Code（California Amended（Note: See UL Standard 1971 for "Visual Devices")	2016 Edition
NFPA 80	Fire Door and Other Opening Protectives	2016 Edition
NFPA 253	Critical Radiant Flux or Floor Covering Systems	2015 Edition
NFPA 2001	Clean Agent Fire Extinguishing Systems（California Amended）	2015 Edition

IDENTIFICATION STAMP
DIV. OF THE STATE ARCHITECT
APP. 03-119532 INC:
REVIEWED FOR
SS ☑ FLS ☑ ACS ☑
DATE: 6/24/19

WESTGROUP DESIGNS
ARCHITECTURE | PLANNING | INTERIOR DESIGN
19520 Jamboree Road | Suite 100
Irvine | California | 92612
949.250.0880 | FAX 949.250.0882
www.westgroupdesigns.com

PROTECTION DESIGN AND CONSULTING
2851 Camino Del Rio S, # 210
San Diego, California 2108
www.protectiondesign.com
phone 619.255.6964
fax 619.255.9547

FILLMORE HIGH SCHOOL - NEW CTE BUILDINGS
FILLMORE UNIFIED SCHOOL DISTRICT
555 Central Ave. Fillmore, CA. 93015

ISSUED FOR:

SCHEMATIC DESIGN	11/16/2017
DESIGN DEVELOPMENT	09/21/2018
CONSTRUCTION DOCUMENTS	12/07/2018
50% CD	11/09/2018
95% CD	12/10/2018
DSA SUBMITTAL	12/21/2018
DSA BACKCHECK	05/08/2019

REVISIONS:

NOT FOR CONSTRUCTION

REGISTRATION/SIGNATURE:

DATE: Dec 19, 2018

SHEET TITLE:

GENERAL NOTES

SHEET NUMBER:

FP-1.0

WD PROJ. #	DRAWN BY:	CHECKED	DATE
18413	MH	Checker	12/21/18

© WESTGROUP DESIGNS, INC.

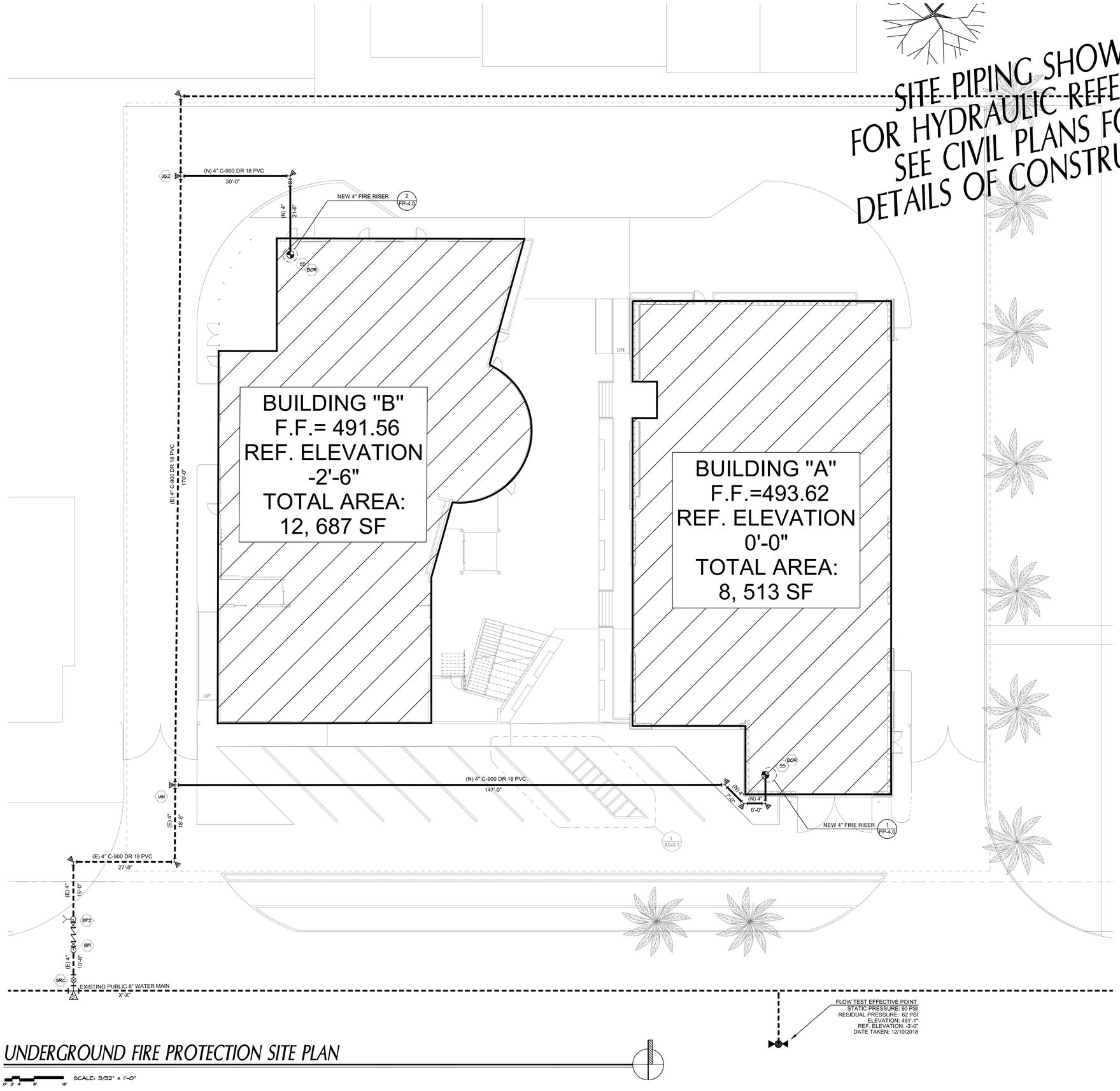

UNDERGROUND FIRE PROTECTION SITE PLAN

SCALE: 3/32" = 1'-0"

IDENTIFICATION STAMP
DIV. OF THE STATE ARCHITECT
APP. 03-119532 INC:
REVIEWED FOR
SS ☑ FLS ☑ ACS ☑
DATE: 6/24/19

WESTGROUP DESIGNS
ARCHITECTURE | PLANNING | INTERIOR DESIGN
19520 Jamboree Road | Suite 100
Irvine | California | 92612
949.250.0880 | FAX 949.250.0882
www.westgroupdesigns.com

PROTECTION DESIGN AND CONSULTING
2851 Camino Del Rio S. # 210
San Diego, California 2108
www.protectiondesign.com
phone 619.255.8964
fax 619.255.9547

FILLMORE HIGH SCHOOL - NEW CTE BUILDINGS

FILLMORE UNIFIED SCHOOL DISTRICT

555 Central Ave. Fillmore, CA. 93015

ISSUED FOR:

SCHEMATIC DESIGN	11/16/2017
DESIGN DEVELOPMENT	09/21/2018
CONSTRUCTION DOCUMENTS	12/07/2018
50% CD	11/09/2018
95% CD	12/10/2018
DSA SUBMITTAL	12/21/2018
DSA BACKCHECK	05/08/2019

REVISIONS:

NOT FOR CONSTRUCTION

REGISTRATION/SIGNATURE:

REGISTERED PROFESSIONAL ENGINEER
FP 1559
Exp. 6/30/19
FIRE PROTECTION
STATE OF CALIFORNIA

DATE: Dec 19, 2018

SHEET TITLE:
UNDERGROUND FIRE PROTECTION SITE PLAN

SHEET NUMBER:
FP-1.1

WD PROJ. #	DRAWN BY:	CHECKED	DATE
18413	MH	Checker	12/21/18

© WESTGROUP DESIGNS, INC.

INSTALLATION NOTES:

PIPE TYPES:

1. MAINS TO BE BLACK SCHEDULE 10 STEEL PIPE, U.O.N.
2. LINES TO BE BLACK SCHEDULE 40 STEEL PIPE, U.O.N.

PIPE SIZES:

1. MAINS & CROSSMAINS TO BE 4" & 4" NOMINAL DIAMETER PIPE, U.O.N.
2. BRANCHLINES TO BE 1 $\frac{1}{4}$, 1 $\frac{1}{2}$" & 1" NOMINAL DIAMETER PIPE, U.O.N.
3. ARM-OVERS AND DROPS TO BE 1" NOMINAL DIAMETER PIPE, U.O.N.

HANGERS:

1. MAXIMUM DISTANCE BETWEEN HANGERS IS PER NFPA 13, 2016 EDITION, 9.2.2.1(a) TABLE.
2. HANG LINES & MAINS TO CONCRETE DECK AT ELEVATIONS NOTED PER DETAIL. (5 / FP-4.0)
3. HANG LINES & MAINS TO STEEL BEAMS AT ELEVATIONS NOTED PER DETAIL. (6 / FP-4.0)
4. HANG LINES & MAINS TO STEEL DECK AT ELEVATIONS NOTED PER DETAIL (11 / FP-4.0)

DENOTES HANGER LOCATION

5. FURNISH RESTRAINING TYPE HANGERS AT THE ENDS OF ALL BRANCHLINES , AND AT EVERY DISTANCE ALONG THE LINES MENTIONED IN THE RESTRAINT SPACING TABLE ON THIS SHEET. (3, 4, 7, 8 / FP-4.0) (9, 12, 13 / FP-4.0)

DENOTES LATERAL RESTRAINT

4. SEE SHEET FP-4.0 & 4.1 FOR DETAILS

MAXIMUM SPACING OF RESTRAINTS (ft)
STEEL PIPE

FILLMORE HS CTE — Cp = 1.17

PIPE SIZE	SEISMIC COEFFICIENT (Cp) Cp < 0.50	0.5 < Cp < 0.71	Cp > 0.71
1"	43'	36'	29'
1-1/4"	46'	38'	27'
1-1/2"	49'	41'	29'
2"	53'	45'	31'

SWAY BRACING

1. SWAY BRACING SHALL BE PER NFPA 13, 2016 EDITION AND CBC ED. 2016. SEE FP-4.1 FOR THE DETAILS AND CALCULATIONS. WHERE HANGER RODS ARE LESS THAN 6" IN LENGTH, LATERAL SWAY BRACING MAY BE OMITTED. 6" DIMENSION SHALL BE MEASURED BETWEEN THE TOP OF THE PIPE AND THE POINT OF ATTACHMENT TO THE BUILDING STRUCTURE PER 9.3.6.5.

DENOTES SWAY BRACE (1, 2, 3, 4 / FP-4.1)

DENOTES FIRESTOP PER (6, 7 / FP-4.1)

HYDRAULIC SYSTEM

THIS BUILDING IS PROTECTED BY A HYDRUALICALLY DESIGNED AUTOMATIC SPRINKLER SYSTEM

Location	AUTO REPAIR LAB 100
Sprinkler Information	
NUMBER OF FLOWING SPRINKLERS	14
MANUFACTURE	VIKING
MODEL	MICROFAST VK300
155°	QR
1/2 ORIFICE	5.6K
Basis of Design	
STANDARD	NFPA 13 2016
HAZARD GROUP	ORDINARY HAZARD II
DENSITY	0.20
DESIGNED AREA OF DISCHARGED	1, 602 SQ. FT.
System Demand	
GPM DEMAND AT THE BASE OF THE RISER	366.1 GPM
RESIDUAL PRESSURE AT THE BASE OF THE RISER	31.5 PSI
GPM DEMAND AT THE WATER SUPPLY SOURCE	616.1 GPM
RESIDUAL PRESSURE AT THE WATER SUPPLY SOURCE	52.7 PSI
HOUSE STREAM ALLOWANCE	250 GPM OUTSIDE
REMOTE SPRINKLER FLOW	25.2 GPM @ 9.9 PSI

PROTECTION DESIGN AND CONSULTING
2851 Camino Del Rio S. # 210
San Diego, California 92108
www.protectiondesign.com
phone 619.255.8964
fax 619.255.9547

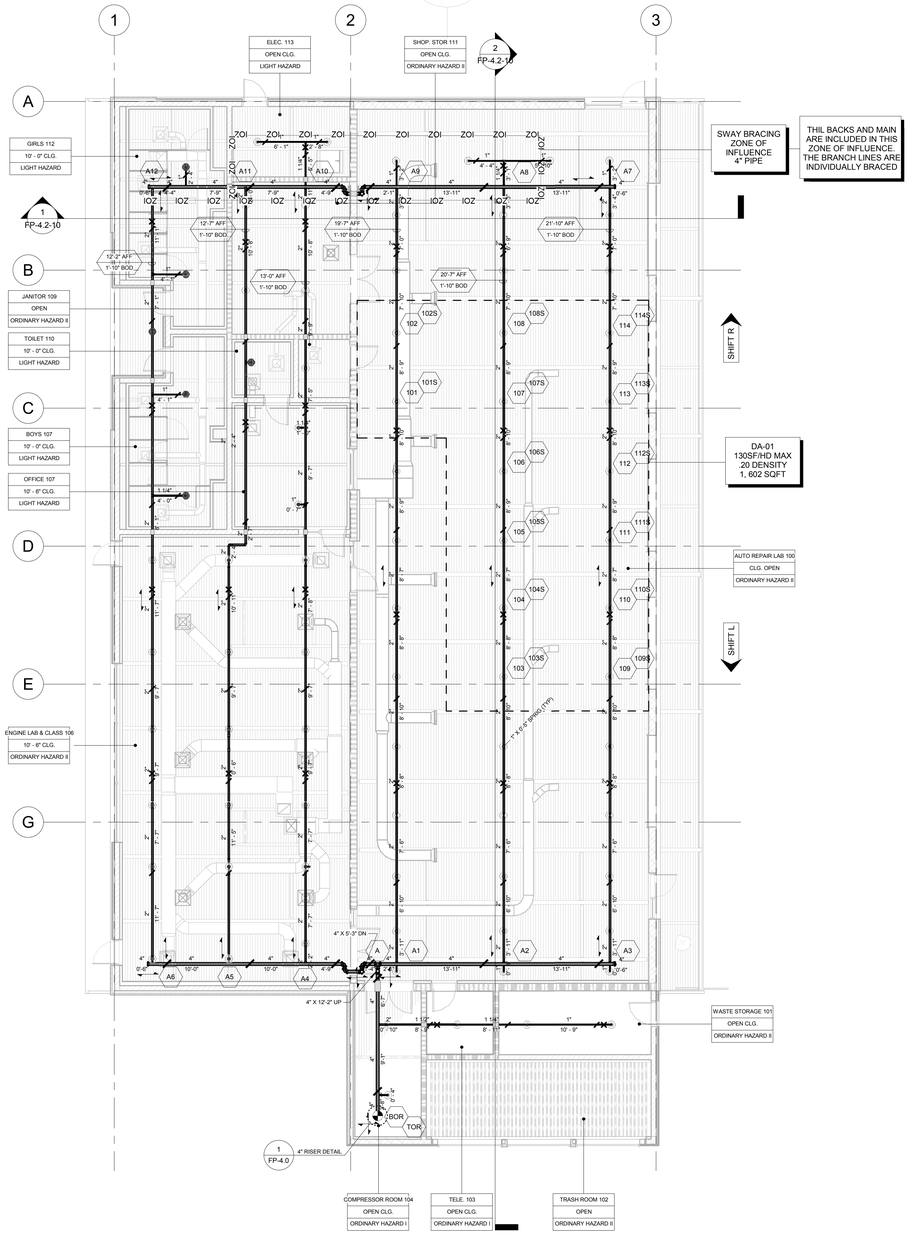

FIRE SPRINKLER PIPING PLAN BLDG. A
1/8" = 1'-0"

0' 4' 8' 16' 32'

FIRE SPRINKLER LEGEND											SPACING		ESCUTCHEON		COMMENTS	TOTAL
SYM	LOCATION	MFR	MODEL	SIN	SR/QR	K-FAC	TYPE	TEMP	FIN	THRD	MIN/MAX	AREA	TYPE	FIN		
	FINISHED CEILING	VIKING	MICROFAST	VK302	QR / SR	5.6K	SSP	155°	WHITE	1/2"	6'-0" 15'-0"	225 S.F.	RECCESSED	CHROME		20
	FINISHED CEILING	VIKING	MIRAGE	VK462	QR / SR	5.6K	SSP	155°	WHITE	1/2"	6'-0" 15'-0"	225 S.F.	CONCEALED	WHITE		6
	OPEN CEILING	VIKING	-	VK3501	QR / SR	8.0K	SSU	200°	BRASS	1/2"	6'-0" 15'-0"	225 S.F.	N/A	BRASS		55
															TOTAL THIS SHEET	81

KEY PLAN

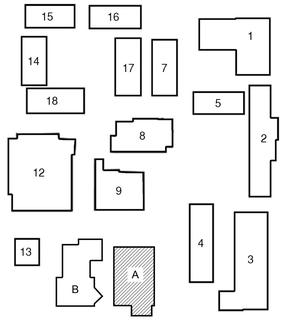

IDENTIFICATION STAMP
DIV. OF THE STATE ARCHITECT
APP. 03-119532 INC:
REVIEWED FOR
SS ☑ FLS ☑ ACS ☑
DATE: 6/24/19

WESTGROUP DESIGNS
ARCHITECTURE | PLANNING | INTERIOR DESIGN
19520 Jamboree Road | Suite 100
Irvine | California | 92612
949.250.0880 | FAX 949.250.0882
www.westgroupdesigns.com

PROTECTION DESIGN AND CONSULTING
2851 Camino Del Rio S. # 210
San Diego, California 2108
www.protectiondesign.com
phone 619.255.8964
fax 619.255.9547

FILLMORE HIGH SCHOOL - NEW CTE BUILDINGS

FILLMORE UNIFIED SCHOOL DISTRICT

555 Central Ave. Fillmore, CA. 93015

ISSUED FOR:

SCHEMATIC DESIGN	11/16/2017
DESIGN DEVELOPMENT	09/21/2018
CONSTRUCTION DOCUMENTS	12/07/2018
50% CD	11/09/2018
95% CD	12/10/2018
DSA SUBMITTAL	12/21/2018
DSA BACKCHECK	05/08/2019

RE/VISIONS:

NOT FOR CONSTRUCTION

REGISTRATION/SIGNATURE:

REGISTERED PROFESSIONAL ENGINEER — TRAVIS S. AVERY — FP 1559 — Exp. 6/30/19 — FIRE PROTECTION — STATE OF CALIFORNIA

DATE: Dec 19, 2018

SHEET TITLE:

FIRE SPRINKLER PIPING PLAN

SHEET NUMBER:

FP-2.0-10

WD PROJ. #	DRAWN BY:	CHECKED	DATE
18413	MH	Checker	12/21/18

© WESTGROUP DESIGNS, INC.

INSTALLATION NOTES:

PIPE TYPES:

1. MAINS TO BE BLACK SCHEDULE 10 STEEL PIPE, U.O.N.
2. LINES TO BE BLACK SCHEDULE 40 STEEL PIPE, U.O.N.

PIPE SIZES:

1. MAINS & CROSSMAINS TO BE 4" & 4" NOMINAL DIAMETER PIPE, U.O.N.
2. BRANCHLINES TO BE 1 1/4", 1 1/4" & 1" NOMINAL DIAMETER PIPE, U.O.N.
3. ARM-OVERS AND DROPS TO BE 1" NOMINAL DIAMETER PIPE, U.O.N.

HANGERS:

1. MAXIMUM DISTANCE BETWEEN HANGERS IS PER NFPA 13, 2016 EDITION, 9.2.2.1(a) TABLE.
2. HANG LINES & MAINS TO CONCRETE DECK AT ELEVATIONS NOTED PER DETAIL. (5 / FP-4.0)
3. HANG LINES & MAINS TO STEEL BEAMS AT ELEVATIONS NOTED PER DETAIL. (6 / FP-4.0)
4. HANG LINES & MAINS TO STEEL DECK AT ELEVATIONS NOTED PER DETAIL (11 / FP-4.0)

DENOTES HANGER LOCATION

5. FURNISH RESTRAINING TYPE HANGERS AT THE ENDS OF ALL BRANCHLINES , AND AT EVERY DISTANCE ALONG THE LINES MENTIONED IN THE RESTRAINT SPACING TABLE ON THIS SHEET. (3, 4, 7, 8 / FP-4.0) (9, 12, 13 / FP-4.0)

DENOTES LATERAL RESTRAINT

4. SEE SHEET FP-4.0 & 4.1 FOR DETAILS

MAXIMUM SPACING OF RESTRAINTS (ft)
STEEL PIPE

FILLMORE HS CTE — Cp = 1.17

	SEISMIC COEFFICIENT (Cp)		
PIPE SIZE	Cp < 0.50	0.5 < Cp < 0.71	Cp > 0.71
1"	43'	36'	26'
1-1/4"	46'	39'	27'
1-1/2"	49'	41'	29'
2"	53'	45'	31'

SWAY BRACING

1. SWAY BRACING SHALL BE PER NFPA 13, 2016 EDITION AND CBC ED. 2016. SEE FP-4.1 FOR THE DETAILS AND CALCULATIONS. WHERE HANGER RODS ARE LESS THAN 6" IN LENGTH, LATERAL SWAY BRACING MAY BE OMITTED. 6" DIMENSION SHALL BE MEASURED BETWEEN THE TOP OF THE PIPE AND THE POINT OF ATTACHMENT TO THE BUILDING STRUCTURE PER 9.3.6.5.

DENOTES SWAY BRACE (1, 2, 3, 4 / FP-4.1)

DENOTES FIRESTOP PER (6, 7 / FP-4.1)

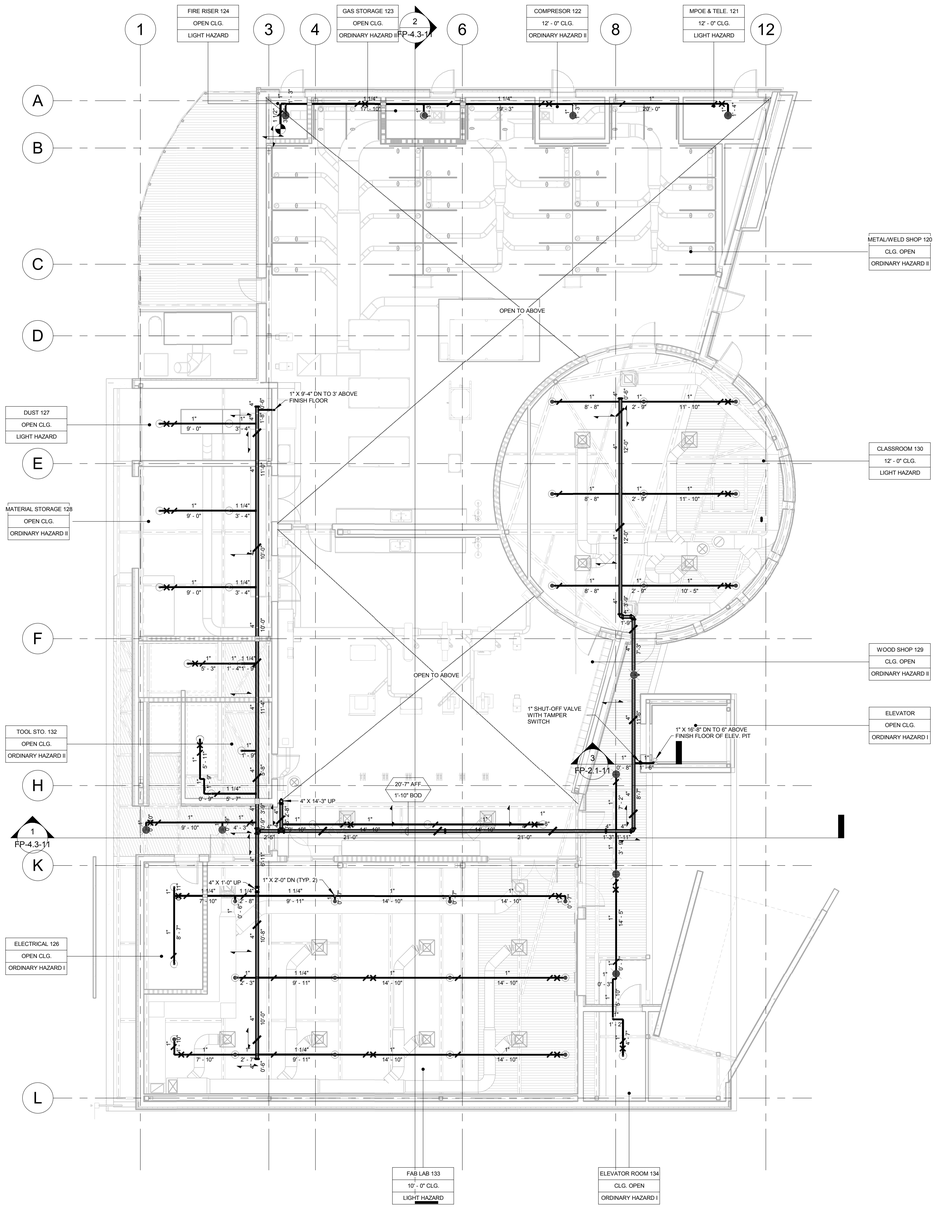

LEVEL 1 - FIRE SPRINKLER PIPING PLAN
BLDG B
1/8" = 1'-0"

0' 4' 8' 16' 32'

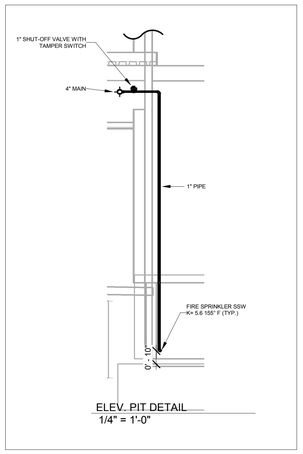

ELEV. PIT DETAIL
1/4" = 1'-0"

FIRE SPRINKLER LEGEND											SPACING		ESCUTCHEON		COMMENTS	TOTAL
SYM	LOCATION	MFR	MODEL	SIN	SR/QR	K-FAC	TYPE	TEMP	FIN	THRD	MIN/MAX	AREA	TYPE	FIN		
◉	FINISHED CEILING	VIKING	MICROFAST	VK302	QR / SR	5.6K	SSP	155°	WHITE	1/2"	6'-0" 15'-0"	225 S.F.	RECCESSED	WHITE		22
●	FINISHED CEILING	VIKING	MIRAGE	VK462	QR / SR	5.6K	SSP	155°	WHITE	1/2"	6'-0" 15'-0"	225 S.F.	CONCEALED	WHITE	CORROSION RESISTANT	6
○	OPEN CEILING	VIKING	MICROFAST	VK300	QR / SR	5.6K	SSU	200°	BRASS	1/2"	6'-0" 15'-0"	225 S.F.	N/A	BRASS		18
▷	SIDE WALL	VIKING	MICROFAST	VK305	QR / SR	5.6K	SSW	155°	WHITE	1/2"	6'-0" 14'-0"	196 S.F.	N/A	N/A		1
															TOTAL THIS SHEET	47

KEY PLAN

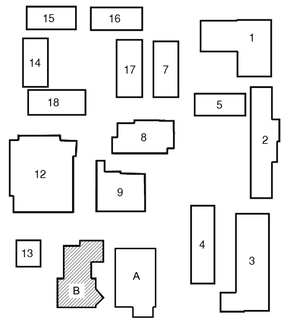

IDENTIFICATION STAMP
DIV. OF THE STATE ARCHITECT
APP. 03-119532 INC:
REVIEWED FOR
SS ☑ FLS ☑ ACS ☑
DATE: 6/24/19

WESTGROUP DESIGNS
ARCHITECTURE | PLANNING | INTERIOR DESIGN
19520 Jamboree Road | Suite 100
Irvine | California | 92612
949.250.0880 | FAX 949.250.0882
www.westgroupdesigns.com

PROTECTION DESIGN AND CONSULTING
2851 Camino Del Rio S. # 210
San Diego, California 2108
www.protectiondesign.com
phone 619.255.8964
fax 619.255.9547

FILLMORE HIGH SCHOOL - NEW CTE BUILDINGS

FILLMORE UNIFIED SCHOOL DISTRICT

555 Central Ave. Fillmore, CA. 93015

ISSUED FOR:

SCHEMATIC DESIGN	11/16/2017
DESIGN DEVELOPMENT	09/21/2018
CONSTRUCTION DOCUMENTS	12/07/2018
50% CD	11/09/2018
95% CD	12/10/2018
DSA SUBMITTAL	12/21/2018
DSA BACKCHECK	05/08/2019

REVISIONS:

NOT FOR CONSTRUCTION

REGISTRATION/SIGNATURE:

REGISTERED PROFESSIONAL ENGINEER
JASON S. MUNN
FP 1559
Exp. 6/30/19
FIRE PROTECTION
STATE OF CALIFORNIA

DATE: Dec 19, 2018

SHEET TITLE:

LEVEL 1 - FIRE SPRINKLER PIPING PLAN

SHEET NUMBER:

FP-2.1-11

WD PROJ. #	DRAWN BY:	CHECKED	DATE
18413	MH	Checker	12/21/18

© WESTGROUP DESIGNS, INC.

INSTALLATION NOTES:

PIPE TYPES:

1. MAINS TO BE BLACK SCHEDULE 10 STEEL PIPE, U.O.N.
2. LINES TO BE BLACK SCHEDULE 40 STEEL PIPE, U.O.N.

PIPE SIZES:

1. MAINS & CROSSMAINS TO BE 4" & 4" NOMINAL DIAMETER PIPE, U.O.N.
2. BRANCHLINES TO BE 1 $\frac{1}{2}$, 1 $\frac{1}{4}$" & 1" NOMINAL DIAMETER PIPE, U.O.N.
3. ARM-OVERS AND DROPS TO BE 1" NOMINAL DIAMETER PIPE, U.O.N.

HANGERS:

1. MAXIMUM DISTANCE BETWEEN HANGERS IS PER NFPA 13, 2016 EDITION, 9.2.2.1(a) TABLE.
2. HANG LINES & MAINS TO CONCRETE DECK AT ELEVATIONS NOTED PER DETAIL. (5 / FP-4.0)
3. HANG LINES & MAINS TO STEEL BEAMS AT ELEVATIONS NOTED PER DETAIL. (6 / FP-4.0)
4. HANG LINES & MAINS TO STEEL DECK AT ELEVATIONS NOTED PER DETAIL (11 / FP-4.0)

DENOTES HANGER LOCATION

5. FURNISH RESTRAINING TYPE HANGERS AT THE ENDS OF ALL BRANCHLINES , AND AT EVERY DISTANCE ALONG THE LINES MENTIONED IN THE RESTRAINT SPACING TABLE ON THIS SHEET. (3, 4, 7, 8 / FP-4.0) (9, 12, 13 / FP-4.0)

DENOTES LATERAL RESTRAINT

4. SEE SHEET FP-4.0 & 4.1 FOR DETAILS

MAXIMUM SPACING OF RESTRAINTS (ft)
STEEL PIPE

FILLMORE HS CTE — Cp = 1.17

	SEISMIC COEFFICIENT (Cp)		
PIPE SIZE	Cp < 0.56	0.5 < Cp < 0.71	Cp > 0.71
1"	43'	36'	26'
1-1/4"	46'	39'	27'
1-1/2"	49'	41'	29'
2"	53'	45'	31'

SWAY BRACING

1. SWAY BRACING SHALL BE PER NFPA 13, 2016 EDITION AND CBC ED. 2016. SEE FP-4.1 FOR THE DETAILS AND CALCULATIONS. WHERE HANGER RODS ARE LESS THAN 6" IN LENGTH, LATERAL SWAY BRACING MAY BE OMITTED. 6" DIMENSION SHALL BE MEASURED BETWEEN THE TOP OF THE PIPE AND THE POINT OF ATTACHMENT TO THE BUILDING STRUCTURE PER 9.3.6.5.

DENOTES SWAY BRACE (1, 2, 3, 4 / FP-4.1)

DENOTES FIRESTOP PER (6, 7 / FP-4.1)

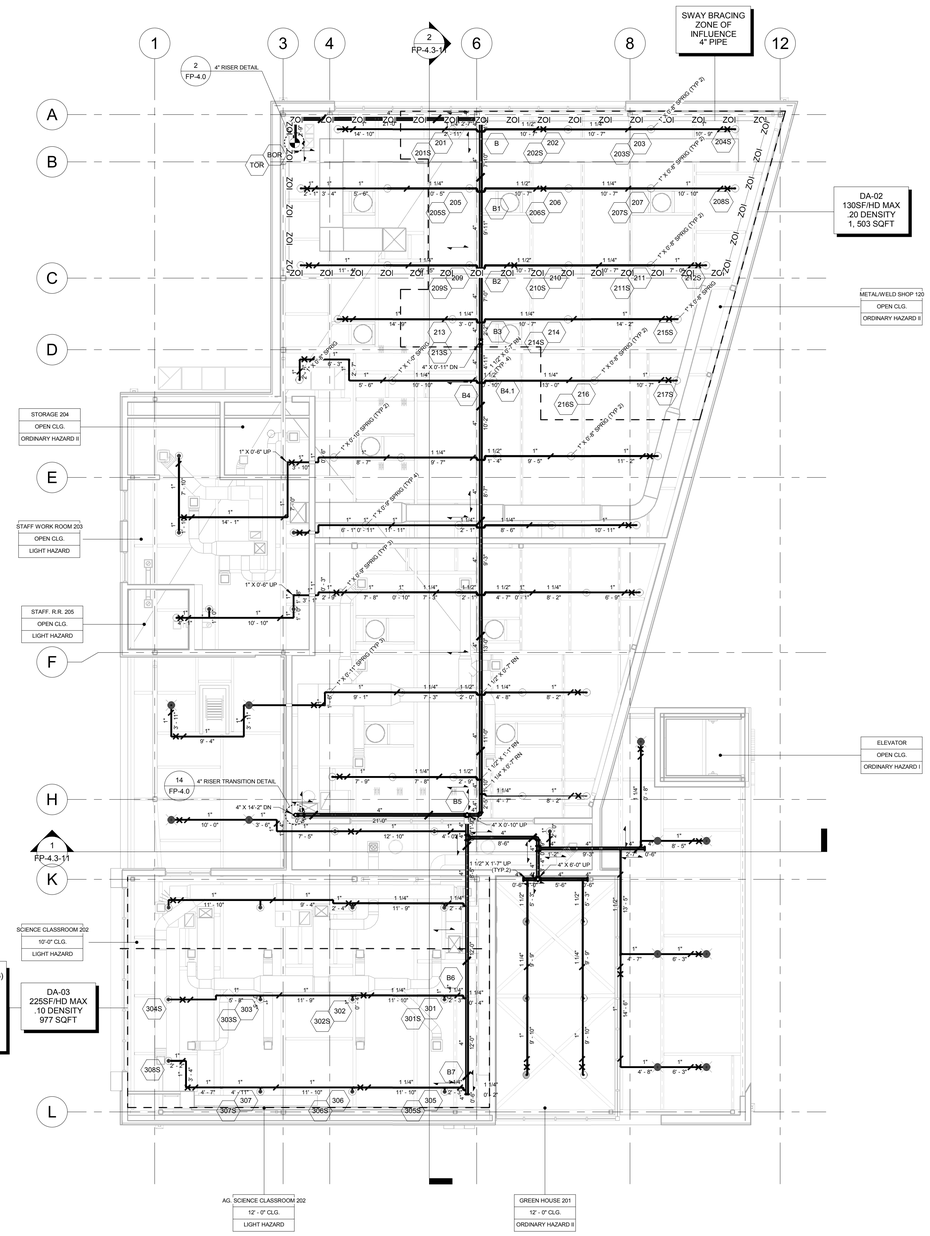

LEVEL2 - FIRE SPRINKLER PIPING PLAN
BLDG. B
1/8" = 1'-0"

0' 4' 8' 16' 32'

HYDRAULIC SYSTEM
THIS BUILDING IS PROTECTED BY A HYDRUALICALLY DESIGNED AUTOMATIC SPRINKLER SYSTEM

Location	
	AUTO REPAIR LAB 100
Sprinkler Information	
NUMBER OF FLOWING SPRINKLERS	17
MANUFACTURE	VIKING
MODEL	MICROFAST VK300
155°	QR
1/2 ORIFICE	5.6K
Basis of Design	
STANDARD	NFPA 13 2016
HAZARD GROUP	ORDINARY HAZARD II
DENSITY	0.20
DESIGNED AREA OF DISCHARGED	1, 503 SQ. FT.
System Demand	
GPM DEMAND AT THE BASE OF THE RISER	367.7 GPM
RESIDUAL PRESSURE AT THE BASE OF THE RISER	34.3 PSI
GPM DEMAND AT THE WATER SUPPLY SOURCE	617.7 GPM
RESIDUAL PRESSURE AT THE WATER SUPPLY SOURCE	57.3 PSI
HOUSE STREAM ALLOWANCE	250 GPM OUTSIDE
REMOTE SPRINKLER FLOW	20.0 GPM @ 12.8 PSI

PROTECTION DESIGN AND CONSULTING
2851 Camino Del Rio S. # 210
San Diego, California 92108
www.protectiondesign.com
phone 619.255.8964
fax 619.255.9547

HYDRUALIC SYSTEM
THIS BUILDING IS PROTECTED BY A HYDRUALICALLY DESIGNED AUTOMATIC SPRINKLER SYSTEM

Location	
	SCIENCE CLASSROOM 202
Sprinkler Information	
NUMBER OF FLOWING SPRINKLERS	8
MANUFACTURE	VIKING
MODEL	MICROFAST VK302
155°	QR
1/2 ORIFICE	5.6K
Basis of Design	
STANDARD	NFPA 13 2016
HAZARD GROUP	ORDINARY HAZARD II
DENSITY	0.10
DESIGNED AREA OF DISCHARGED	977 SQ. FT.
System Demand	
GPM DEMAND AT THE BASE OF THE RISER	148.0 GPM
RESIDUAL PRESSURE AT THE BASE OF THE RISER	39.3 PSI
GPM DEMAND AT THE WATER SUPPLY SOURCE	248.0 GPM
RESIDUAL PRESSURE AT THE WATER SUPPLY SOURCE	54.5 PSI
HOUSE STREAM ALLOWANCE	100 GPM OUTSIDE
REMOTE SPRINKLER FLOW	14.8 GPM @ 7.0 PSI

PROTECTION DESIGN AND CONSULTING
2851 Camino Del Rio S. # 210
San Diego, California 92108
www.protectiondesign.com
phone 619.255.8964
fax 619.255.9547

FIRE SPRINKLER LEGEND											SPACING			ESCUTCHEON		COMMENTS	TOTAL
SYM	LOCATION	MFR	MODEL	SIN	SR/QR	K-FAC	TYPE	TEMP	FIN	THRD	MIN/MAX	AREA		TYPE	FIN		
◉	FINISHED CEILING	VIKING	MICROFAST	VK302	QR / SR	5.6K	SSP	155°	WHITE	1/2"	6'-0"	15'-0"	225 S.F.	RECCESSED	WHITE		20
●	FINISHED CEILING	VIKING	MIRAGE	VK462	QR / SR	5.6K	SSP	155°	WHITE	1/2"	6'-0"	15'-0"	225 S.F.	CONCEALED	WHITE	CORROSION RESISTANT	11
○	OPEN CEILING	VIKING	MICROFAST	VK300	QR / SR	5.6K	SSU	200°	BRASS	1/2"	6'-0"	15'-0"	225 S.F.	N/A	BRASS		53
																TOTAL THIS SHEET	84

KEY PLAN

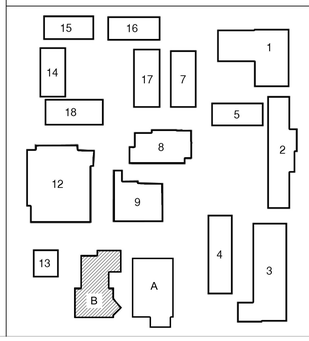

IDENTIFICATION STAMP
DIV. OF THE STATE ARCHITECT
APP. 03-119532 INC:
REVIEWED FOR
SS ☑ FLS ☑ ACS ☑
DATE: 6/24/19

WESTGROUP DESIGNS
ARCHITECTURE | PLANNING | INTERIOR DESIGN
19520 Jamboree Road | Suite 100
Irvine | California | 92612
949.250.0880 | FAX 949.250.0882
www.westgroupdesigns.com

PROTECTION DESIGN AND CONSULTING
2851 Camino Del Rio S. # 210
San Diego, California 2108
www.protectiondesign.com
phone 619.255.8964
fax 619.255.9547

FILLMORE HIGH SCHOOL - NEW CTE BUILDINGS
FILLMORE UNIFIED SCHOOL DISTRICT
555 Central Ave. Fillmore, CA. 93015

ISSUED FOR:

SCHEMATIC DESIGN	11/16/2017
DESIGN DEVELOPMENT	09/21/2018
CONSTRUCTION DOCUMENTS	12/07/2018
50% CD	11/05/2018
95% CD	12/10/2018
DSA SUBMITTAL	12/21/2018
DSA BACKCHECK	05/08/2019

REVISIONS:

NOT FOR CONSTRUCTION

REGISTRATION/SIGNATURE:

REGISTERED PROFESSIONAL ENGINEER
JONATHAN S. MITCHELL
FP1559
Exp. 6/30/19
FIRE PROTECTION
STATE OF CALIFORNIA

DATE: Dec 19, 2018

SHEET TITLE:
LEVEL 2 - FIRE SPRINKLER PIPING PLAN

SHEET NUMBER:
FP-2.2-11

WD PROJ. #	DRAWN BY:	CHECKED	DATE
18413	MH	Checker	12/21/18

© WESTGROUP DESIGNS, INC.

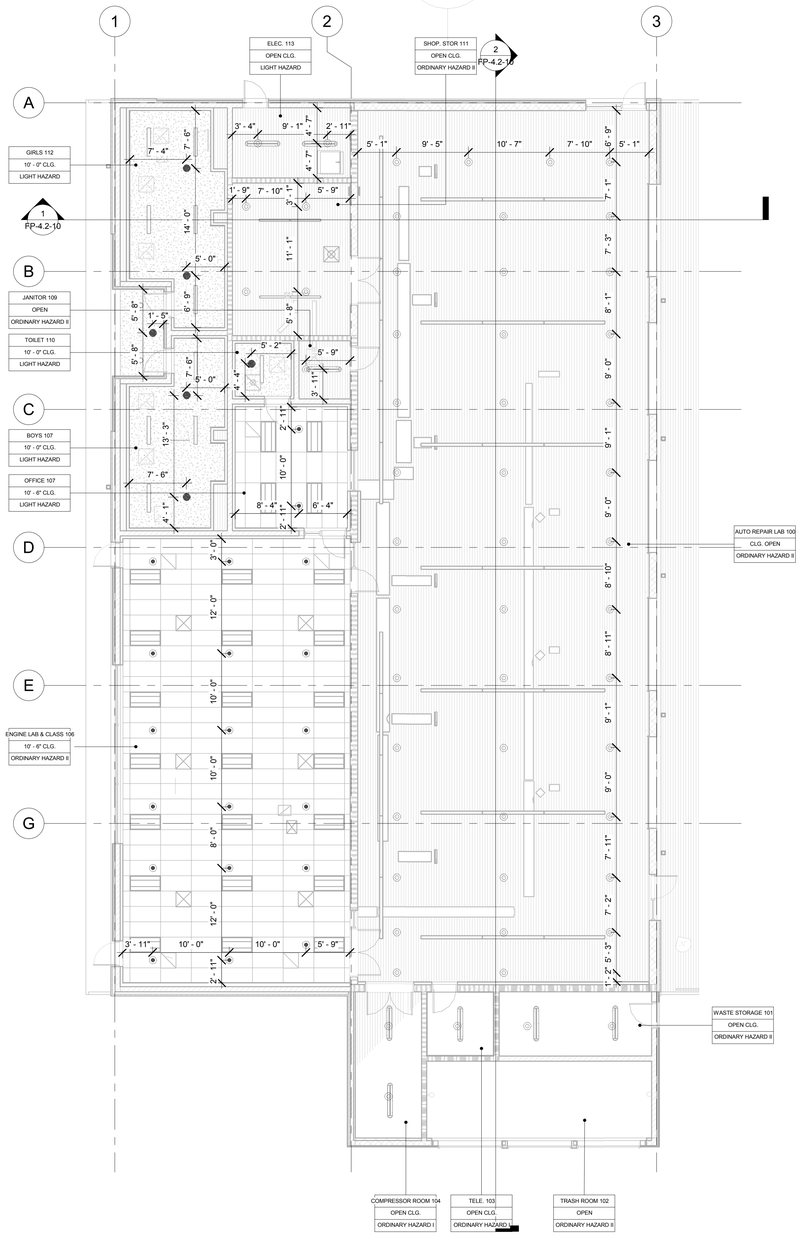

FIRE SPRINKLER RCP PLAN BLDG. A
1/8" = 1'-0"

0' 4' 8' 16' 32'

FIRE SPRINKLER LEGEND											SPACING		ESCUTCHEON		COMMENTS	TOTAL
SYM	LOCATION	MFR	MODEL	SIN	SR/QR	K-FAC	TYPE	TEMP	FIN	THRD	MIN/MAX	AREA	TYPE	FIN		
◉	FINISHED CEILING	VIKING	MICROFAST	VK302	QR / SR	5.6K	SSP	155°	WHITE	1/2"	6'-0"	15'-0"	225 S.F.	RECCESSED	WHITE		x
●	FINISHED CEILING	TYCO	MIRAGE	VK462	QR / SR	5.6K	SSP	155°	WHITE	1/2"	6'-0"	15'-0"	225 S.F.	CONCEALED	WHITE		
●	FINISHED CEILING	TYCO	MIRAGE	VK462	QR / SR	5.6K	SSP	155°	WHITE	1/2"	6'-0"	15'-0"	225 S.F.	CONCEALED	WHITE	CORROSION RESISTANT	
○	OPEN CEILING	VIKING	MICROFAST	VK300	QR / SR	5.6K	SSU	200°	BRASS	1/2"	6'-0"	15'-0"	225 S.F.	N/A	BRASS		
⌧	OPEN CEILING	VIKING	MICROFAST	VK300	QR / SR	5.6K	SSU	200°	BRASS	1/2"	6'-0"	15'-0"	225 S.F.	N/A	BRASS	CORROSION RESISTANT	
															TOTAL THIS SHEET	

KEY PLAN

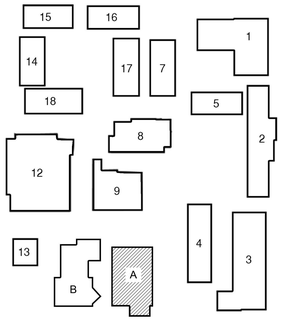

IDENTIFICATION STAMP
DIV. OF THE STATE ARCHITECT
APP. 03-119532 INC:
REVIEWED FOR
SS ☑ FLS ☑ ACS ☑
DATE: 6/24/19

WESTGROUP DESIGNS
ARCHITECTURE | PLANNING | INTERIOR DESIGN
19520 Jamboree Road | Suite 100
Irvine | California | 92612
949.250.0880 | FAX 949.250.0882
www.westgroupdesigns.com

PROTECTION DESIGN AND CONSULTING
2851 Camino Del Rio S. # 210
San Diego, California 2108
www.protectiondesign.com
phone 619.255.8964
fax 619.255.9547

FILLMORE HIGH SCHOOL - NEW CTE BUILDINGS

FILLMORE UNIFIED SCHOOL DISTRICT

555 Central Ave. Fillmore, CA. 93015

ISSUED FOR:

SCHEMATIC DESIGN	11/16/2017
DESIGN DEVELOPMENT	09/21/2018
CONSTRUCTION DOCUMENTS	12/07/2018
50% CD	11/09/2018
95% CD	12/10/2018
DSA SUBMITTAL	12/21/2018
DSA BACKCHECK	05/08/2019

RE/VISIONS:

NOT FOR CONSTRUCTION

REGISTRATION/SIGNATURE:

REGISTERED PROFESSIONAL ENGINEER
JAMES S. AVILA
FP 1559
Exp. 6/30/19
FIRE PROTECTION
STATE OF CALIFORNIA

DATE: Dec 19, 2018

SHEET TITLE:

FIRE SPRINKLER RCP PLAN

SHEET NUMBER:

FP-3.0-10

WD PROJ. #	DRAWN BY:	CHECKED	DATE
18413	MH	Checker	12/21/18

© WESTGROUP DESIGNS, INC.

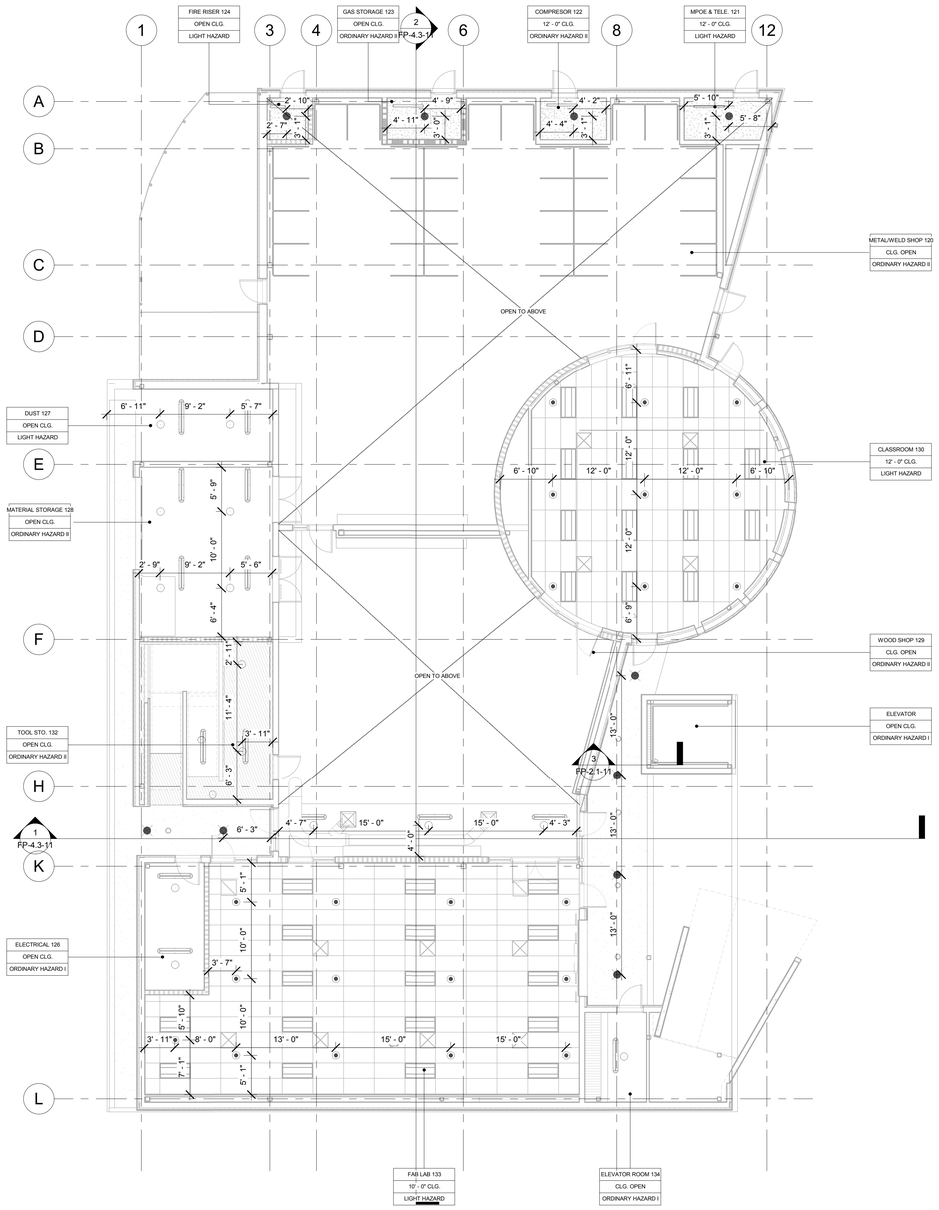

LEVEL 1 - FIRE SPRINKLER RCP PLAN
BLDG. B
1/8" = 1'-0"

0' 4' 8' 16' 32'

FIRE SPRINKLER LEGEND											SPACING		ESCUTCHEON		COMMENTS	TOTAL
SYM	LOCATION	MFR	MODEL	SIN	SR/QR	K-FAC	TYPE	TEMP	FIN	THRD	MIN/MAX	AREA	TYPE	FIN		
◉	FINISHED CEILING	VIKING	MICROFAST	VK302	QR / SR	5.6K	SSP	155°	WHITE	1/2"	6'-0" 15'-0"	225 S.F.	RECCESSED	WHITE		X
●	FINISHED CEILING	TYCO	MIRAGE	VK462	QR / SR	5.6K	SSP	155°	WHITE	1/2"	6'-0" 15'-0"	225 S.F.	CONCEALED	WHITE		
●	FINISHED CEILING	TYCO	MIRAGE	VK462	QR / SR	5.6K	SSP	155°	WHITE	1/2"	6'-0" 15'-0"	225 S.F.	CONCEALED	WHITE	CORROSION RESISTANT	
○	OPEN CEILING	VIKING	MICROFAST	VK300	QR / SR	5.6K	SSU	200°	BRASS	1/2"	6'-0" 15'-0"	225 S.F.	N/A	BRASS		
⊙	OPEN CEILING	VIKING	MICROFAST	VK300	QR / SR	5.6K	SSU	200°	BRASS	1/2"	6'-0" 15'-0"	225 S.F.	N/A	BRASS	CORROSION RESISTANT	
															TOTAL THIS SHEET	

KEY PLAN

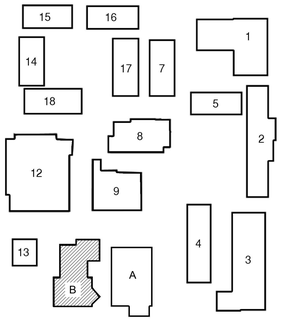

IDENTIFICATION STAMP
DIV. OF THE STATE ARCHITECT
APP. 03-119532 INC:
REVIEWED FOR
SS ☑ FLS ☑ ACS ☑
DATE: 6/24/19

WESTGROUP DESIGNS
ARCHITECTURE | PLANNING | INTERIOR DESIGN
19520 Jamboree Road | Suite 100
Irvine | California | 92612
949.250.0880 | FAX 949.250.0882
www.westgroupdesigns.com

PROTECTION DESIGN AND CONSULTING
2851 Camino Del Rio S. # 210
San Diego, California 2108
www.protectiondesign.com
phone 619.255.8964
fax 619.255.9547

FILLMORE HIGH SCHOOL - NEW CTE BUILDINGS

FILLMORE UNIFIED SCHOOL DISTRICT

555 Central Ave. Fillmore, CA. 93015

ISSUED FOR:

SCHEMATIC DESIGN	11/16/2017
DESIGN DEVELOPMENT	09/21/2018
CONSTRUCTION DOCUMENTS	12/07/2018
50% CD	11/09/2018
95% CD	12/10/2018
DSA SUBMITTAL	12/21/2018
DSA BACKCHECK	05/08/2019

REVISIONS:

NOT FOR CONSTRUCTION

REGISTRATION/SIGNATURE:

REGISTERED PROFESSIONAL ENGINEER
JAMES S. AVERY
FP 1559
Exp. 6/30/20
FIRE PROTECTION
STATE OF CALIFORNIA

DATE: Dec 19, 2018

SHEET TITLE:

LEVEL 1 - FIRE SPRINKLER RCP PLAN

SHEET NUMBER:

FP-3.1-11

WD PROJ. #	DRAWN BY:	CHECKED	DATE
18413	MH	Checker	12/21/18

© WESTGROUP DESIGNS, INC.

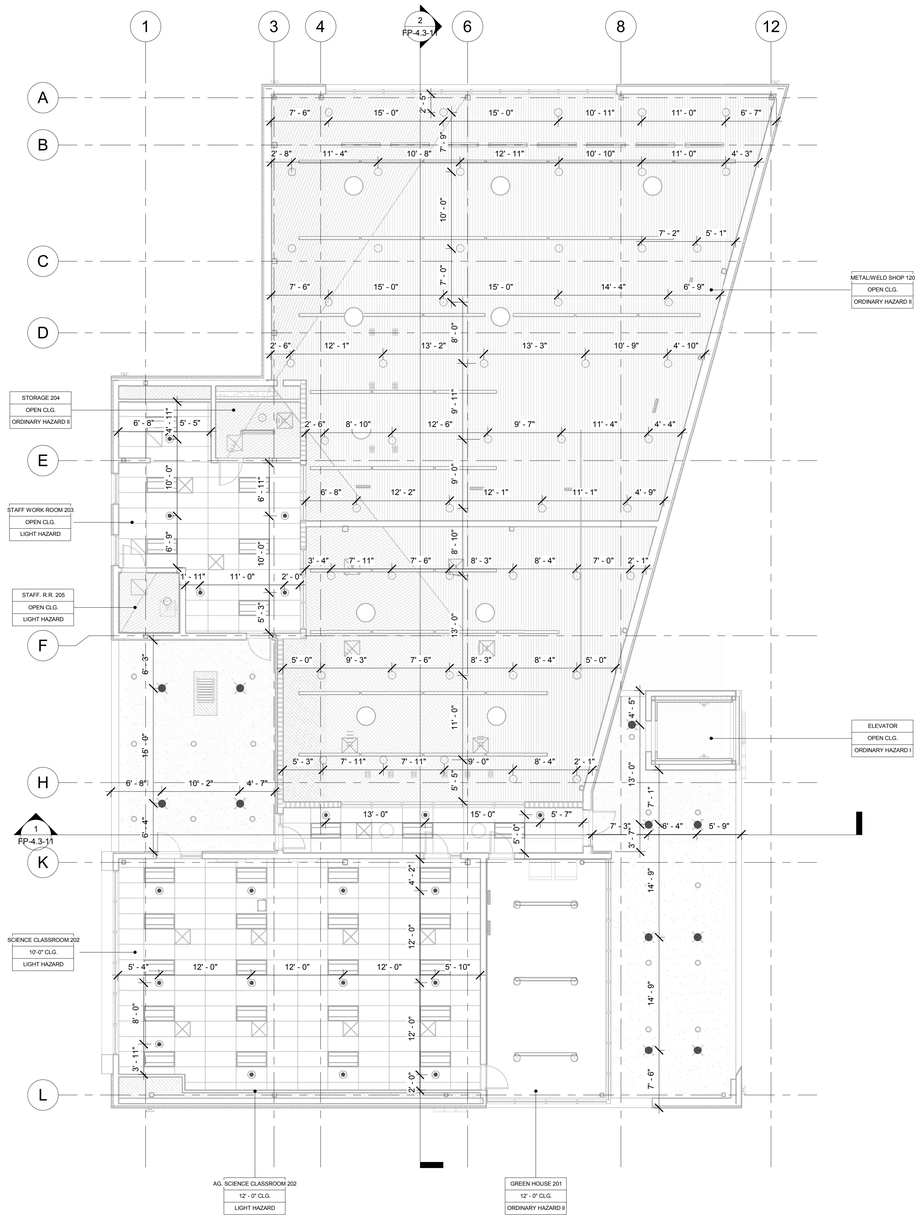

LEVEL2 - FIRE SPRINKLER RCP PLAN
BLDG. B
1/8" = 1'-0"

0' 4' 8' 16' 32'

FIRE SPRINKLER LEGEND											SPACING		ESCUTCHEON		COMMENTS	TOTAL
SYM	LOCATION	MFR	MODEL	SIN	SR/QR	K-FAC	TYPE	TEMP	FIN	THRD	MIN/MAX	AREA	TYPE	FIN		
◉	FINISHED CEILING	VIKING	MICROFAST	VK302	QR / SR	5.6K	SSP	155°	WHITE	1/2"	6'-0"	15'-0"	RECCESSED	WHITE		x
●	FINISHED CEILING	TYCO	MIRAGE	VK462	QR / SR	5.6K	SSP	155°	WHITE	1/2"	6'-0"	15'-0"	CONCEALED	WHITE		
●	FINISHED CEILING	TYCO	MIRAGE	VK462	QR / SR	5.6K	SSP	155°	WHITE	1/2"	6'-0"	15'-0"	CONCEALED	WHITE	CORROSION RESISTANT	
○	OPEN CEILING	VIKING	MICROFAST	VK300	QR / SR	5.6K	SSU	200°	BRASS	1/2"	6'-0"	15'-0"	N/A	BRASS		
⊡	OPEN CEILING	VIKING	MICROFAST	VK300	QR / SR	5.6K	SSU	200°	BRASS	1/2"	6'-0"	15'-0"	N/A	BRASS	CORROSION RESISTANT	
															TOTAL THIS SHEET	

KEY PLAN

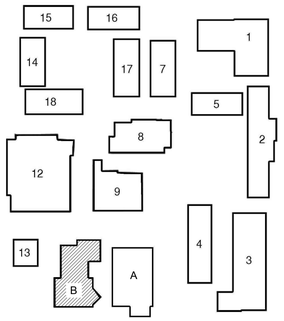

IDENTIFICATION STAMP
DIV. OF THE STATE ARCHITECT
APP. 03-119532 INC:
REVIEWED FOR
SS ☑ FLS ☑ ACS ☑
DATE: 6/24/19

WESTGROUP DESIGNS
ARCHITECTURE | PLANNING | INTERIOR DESIGN
19520 Jamboree Road | Suite 100
Irvine | California | 92612
949.250.0880 | FAX 949.250.0882
www.westgroupdesigns.com

PROTECTION DESIGN AND CONSULTING
2851 Camino Del Rio S. # 210
San Diego, California 2108
www.protectiondesign.com
phone 619.255.8964
fax 619.255.9547

FILLMORE HIGH SCHOOL - NEW CTE BUILDINGS

FILLMORE UNIFIED SCHOOL DISTRICT

555 Central Ave. Fillmore, CA. 93015

ISSUED FOR:

SCHEMATIC DESIGN	11/16/2017
DESIGN DEVELOPMENT	09/21/2018
CONSTRUCTION DOCUMENTS	12/07/2018
50% CD	11/09/2018
95% CD	12/10/2018
DSA SUBMITTAL	12/21/2018
DSA BACKCHECK	05/08/2019

REVISIONS:

NOT FOR CONSTRUCTION

REGISTRATION/SIGNATURE:

REGISTERED PROFESSIONAL ENGINEER
FP 1559
Exp. 6/30/19
FIRE PROTECTION
STATE OF CALIFORNIA

DATE: Dec 19, 2018

SHEET TITLE:

LEVEL 2 - FIRE SPRINKLER RCP PLAN

SHEET NUMBER:

FP-3.2-11

WD PROJ. #	DRAWN BY:	CHECKED	DATE
18413	MH	Checker	12/21/18

© WESTGROUP DESIGNS, INC.

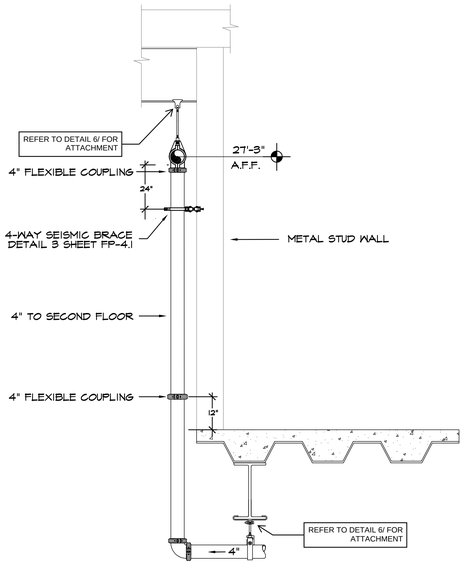

RISER TRANSITION DETAIL BLDG. B

NOT TO SCALE — SHOWN ON PLAN AS — 14 / FP-4.0

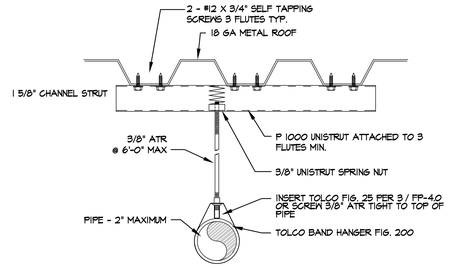

UNI-STRUT HANGER DETAIL

NOT TO SCALE — SHOWN ON PLAN AS — 11 / FP4.0

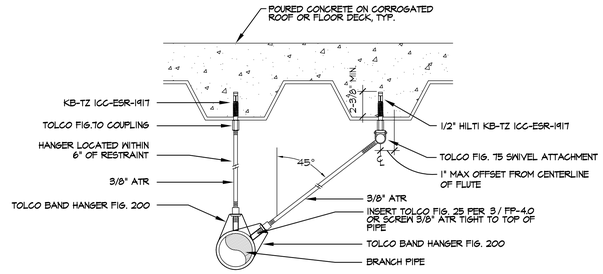

CONCRETE RESTRAINT DETAIL

NOT TO SCALE — SHOWN ON PLAN AS — 7 / FP4.0

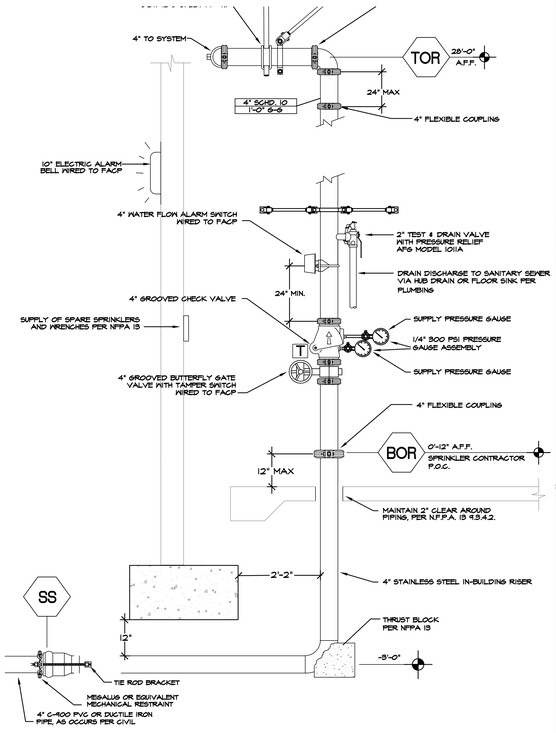

RISER DETAIL FOR NEW BUILDING B

NOT TO SCALE — SHOWN ON PLANS AS — 2 / FP-4.0

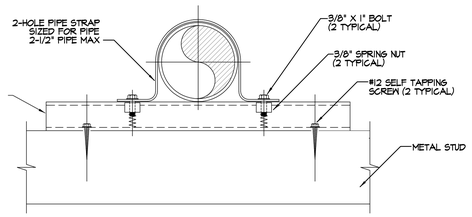

CHANNEL STRUT/PIPE STRAP TO METAL STUD

NOT TO SCALE — SHOWN ON PLAN AS — 10 / FP4.0

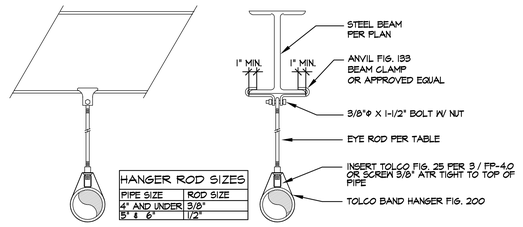

HANGER ROD SIZES	
PIPE SIZE	ROD SIZE
4" AND UNDER	3/8"
5" & 6"	1/2"

BEAM CLAMP HANGER DETAIL

NOT TO SCALE — SHOWN ON PLAN AS — 6 / FP4.0

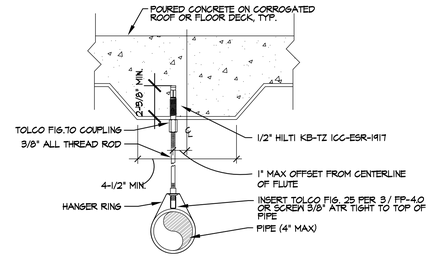

VERTICAL CONCRETE HANGER 4" PIPE

NOT TO SCALE — SHOWN ON PLAN AS — 5 / FP4.0

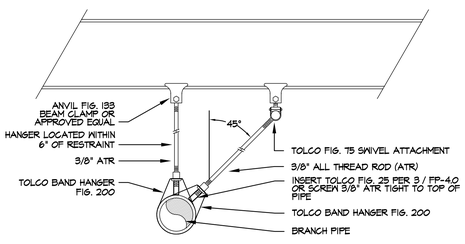

STEEL STRUCTURE RESTRAINT DETAIL

NO SCALE — SHOWN ON PLAN AS — 13 / FP4.0

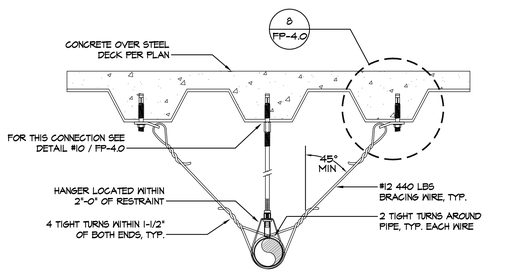

CONCRETE DECK SPLAY WIRE RESTRAINT

NOT TO SCALE — SHOWN ON PLAN AS — 9 / FP4.0

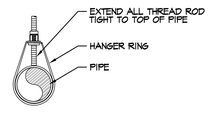

ROD STIFFENER DETAIL

NO SCALE — SHOWN ON PLAN AS — 4 / FP4.0

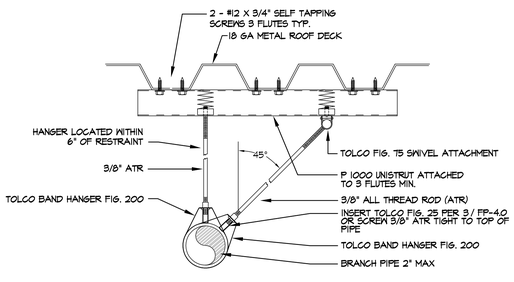

UNISTRUT RESTRAINT DETAIL

NO SCALE — SHOWN ON PLAN AS — 12 / FP4.0

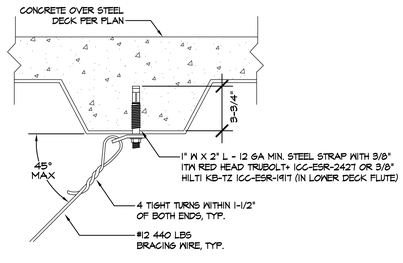

CONCRETE DECK SPLAY WIRE RESTRAINT

NOT TO SCALE — SHOWN ON PLAN AS — 8 / FP4.0

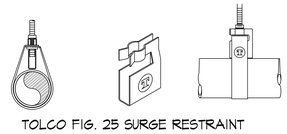

TOLCO FIG. 25 SURGE RESTRAINT

TYPE 1- FOR 1" AND 1-1/4" PIPE AND HANGER
TYPE 2 - FOR 1-1/2" AND 2" PIPE AND HANGER

TOLCO FIG. 25 IS DESIGNED TO BE USED ONLY WITH TOLCO BAND HANGERS FIG. 200 TO RESTRAIN THE UPWARD MOVEMENT OF PIPE AS IT OCCURS DURING SPRINKLER HEAD ACTIVATION OR SEISMIC ACTIVITY

LATERAL RESTRAINTS SHALL BE LOCATED WITHIN 2'-0" OF HANGER. THIS HANGER SHALL BE USED ALONG WITH VERTICAL RESTRAINTS.

VERTICAL RESTRAINT

NOT TO SCALE — SHOWN ON PLAN AS — 3 / FP4.0

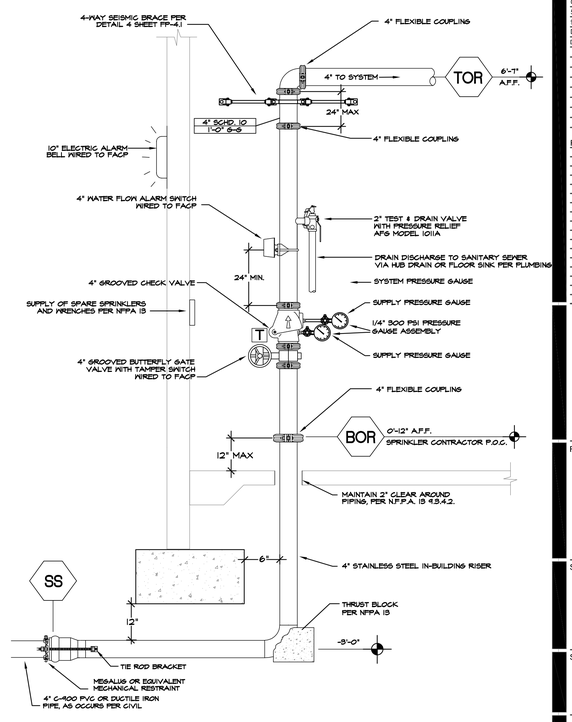

RISER DETAIL FOR NEW BUILDING A

NOT TO SCALE — SHOWN ON PLANS AS — 1 / FP-4.0

IDENTIFICATION STAMP
DIV. OF THE STATE ARCHITECT
APP. 03-119532 INC:
REVIEWED FOR
SS ☑ FLS ☑ ACS ☑
DATE: 6/24/19

WESTGROUP DESIGNS
ARCHITECTURE | PLANNING | INTERIOR DESIGN
19520 Jamboree Road | Suite 100
Irvine | California | 92612
949.250.0880 | FAX 949.250.0882
www.westgroupdesigns.com

PROTECTION DESIGN AND CONSULTING
2851 Camino Del Rio S. # 210
San Diego, California 2108
www.protectiondesign.com
phone 619.255.8964
fax 619.255.8647

FILLMORE HIGH SCHOOL - NEW CTE BUILDINGS

FILLMORE UNIFIED SCHOOL DISTRICT

555 Central Ave. Fillmore, CA. 93015

ISSUED FOR:

SCHEMATIC DESIGN	11/16/2017
DESIGN DEVELOPMENT	09/21/2018
CONSTRUCTION DOCUMENTS	12/07/2018
50% CD	11/09/2018
95% CD	12/10/2018
DSA SUBMITTAL	12/21/2018
DSA BACKCHECK	05/08/2019

REVISIONS:

NOT FOR CONSTRUCTION

REGISTRATION/SIGNATURE:

REGISTERED PROFESSIONAL ENGINEER — TREVOR S. AVILA — FP 1559 — Exp. 6/30/19 — FIRE PROTECTION — STATE OF CALIFORNIA

DATE: Dec 19, 2018

SHEET TITLE:

DETAILS

SHEET NUMBER:

FP-4.0

WD PROJ. #	DRAWN BY:	CHECKED	DATE
18413	MH	Checker	12/21/18

© WESTGROUP DESIGNS, INC.

TOLBrace™ Seismic Bracing Calculations

Project Address: Fillmore HS CTE
555 Central Ave.
Fillmore, CA 93015
Job # 18-26

Contractor:
Address:
Phone:
License:

EATON Powering Business Worldwide

Calculations based on 2016 NFPA Pamphlet #13

Brace Information

Maximum Brace Length	7' 0" (2.134 m)
Diameter of Brace	1" Sch.40
Type of Brace	Sch. 10
Angle of Brace	45° Min.
Least Rad. of Gyration	0.42" (11 mm)
L/R Value	200
Max Horizontal Load	1310 lbs (594 kg)

Other Requirements - FM Approved Loads

TOLCO™ Brace Components

TOLCO™ Component	Listed Load	Adjusted Load
Fig. 1001 Clamp	1200 lbs (544 kg)	1200 lbs (544 kg)
Fig.980 Universal Swivel	1970 lbs (894 kg)	1970 lbs (894 kg)
Fig.800 Across Beam	894 lbs (406 kg)	N/A

*Calculation Based on CONCENTRIC Loading
*Please Note: These calculations are for TOLCO™ components only. Use of any other components voids these calculations and the listing of the assembly.

Fastener Information

Orientation to Connecting Surface	NFPA Type B
Fastener	
Type	Fig.800 Across Beam
Diameter	N/A
Length	N/A
Maximum Load	894 lbs (406 kg)
Prying Factor	N/A

Seismic Brace Assembly Detail

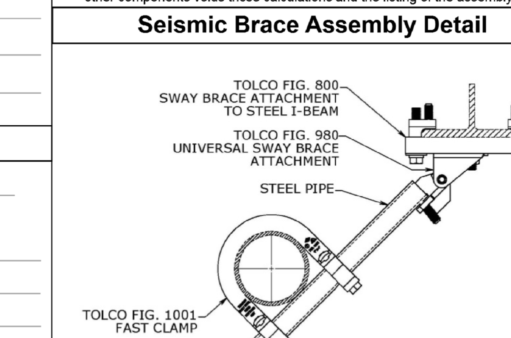

Brace Identification on Plans LATERAL STEEL BLDG A
Brace Type Lateral [X] Longitudinal [ ] 4-Way [ ]

Sprinkler System Load Calculation (Fpw = CpWp)

Cp = 1.17

Diameter	Type	Length	Total Length	Weight Per Unit Length	Total Weight
4" (100 mm)	Sch. 10	40 ft (12.2 m)	40 ft (12.2 m)	11.78 lb/ft (17.53 kg/m)	471 lbs (214 kg)
1.25" (32 mm)	Sch. 40	8.5 ft (2.6 m)	8.5 ft (2.6 m)	2.93 lb/ft (4.36 kg/m)	25 lbs (11 kg)
1" (25 mm)	Sch. 40	22.2 ft (6.8 m)	22.2 ft (6.8 m)	2.05 lb/ft (3.05 kg/m)	46 lbs (21 kg)

Subtotal Weight	542 lbs (246 kg)
Wp (incl. 15%)	623 lbs (283 kg)
Total (Fpw)	729 lbs (331 kg)
Maximum Fpw per 9.3.5.5.2 (if applicable)	769 lb (348 kg)

Main Size	Type/Sch.	Spacing (ft)
4"	Sch. 10	40

{TOLBrace™ Version 8} Use of TOLBrace™ is subject to terms and conditions per the end user license agreement

TOLBrace™ Seismic Calculations

Project Address: Fillmore HS CTE
555 Central Ave.
Fillmore, CA 93015
Job # 18-26

EATON Powering Business Worldwide

Calculations based on 2016 NFPA Pamphlet #13

Brace Information

Maximum Spacing	60' 0" (18.29 m)
Maximum Brace Length	7' 0" (2.13 m)
Bracing Material	1" Sch.40
Angle from Vertical	45° Min.
Least Rad. of Gyration	0.42" (11 mm)
L/R Value	200
Max Horizontal Load	1310 lbs (594 kg)
Force Factor (Cp)	1.17

Other Requirements - FM Approved Loads

TOLCO™ Brace Components

TOLCO™ Component Fig. Number	Adjusted Load
Fig. 4LA Clamp	970 lbs (440 kg)
Fig.980 Universal Swivel	1970 lbs (894 kg)

*Calculation Based on CONCENTRIC Loading
*Please Note: These calculations are for TOLCO™ components only. Use of any other components voids these calculations and the listing of the assembly.

Fastener Information

Fastener Orientation	NFPA Type B
Maximum Load	1970 lbs (894 kg)
Diameter	N/A
Length	N/A
Type	Fig.800 Across Beam

Assembly Detail

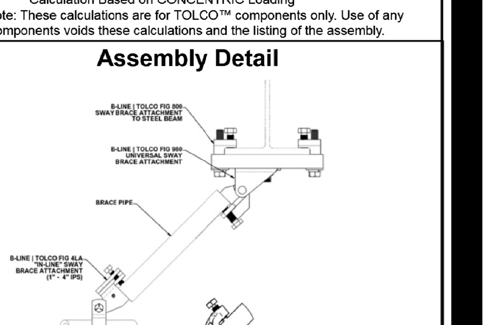

Brace Identification on Plans LONGITUDINAL STEEL BLDG A
Orientation of Brace Longitudinal

Braced Pipe: 4" Sch.10 Steel Pipe

Load Information

Size and Type of Pipe	Total Length	Total Calculated Load
4" Sch.10 Steel Pipe (101.6 mm)	60ft (18.3 m)	827 lbs (375 kg)
Percentage added for Fittings and Sprinklers	15%	124 lbs (56.25 kg)
Total Adjusted Load of all pipe within Zone of Influence		951 lbs (431 kg)

{TOLBrace™ Version 8} Use of TOLBrace™ is subject to terms and conditions per the end user license agreement

TOLBrace™ Seismic Calculations

Project Address: Fillmore HS CTE
555 Central Ave.
Fillmore, CA 93015
Job # 18-26

EATON Powering Business Worldwide

Calculations based on 2016 NFPA Pamphlet #13

Brace Information

Maximum Spacing	20' 0" (6.1 m)
Maximum Brace Length	7' 0" (2.13 m)
Bracing Material	1" Sch.40
Angle from Vertical	45° Min.
Least Rad. of Gyration	0.42" (11 mm)
L/R Value	200
Max Horizontal Load	1310 lbs (594 kg)
Force Factor (Cp)	1.17

Other Requirements - FM Approved Loads

TOLCO™ Brace Components

TOLCO™ Component Fig. Number	Adjusted Load
Fig. 1001 Clamp	1200 lbs (544 kg)
Fig.980 Universal Swivel	1970 lbs (894 kg)

*Calculation Based on CONCENTRIC Loading
*Please Note: These calculations are for TOLCO™ components only. Use of any other components voids these calculations and the listing of the assembly.

Fastener Information

Fastener Orientation	NFPA Type B
Maximum Load	1970 lbs (894 kg)
Diameter	N/A
Length	N/A
Type	Fig.800 Across Beam

Assembly Detail

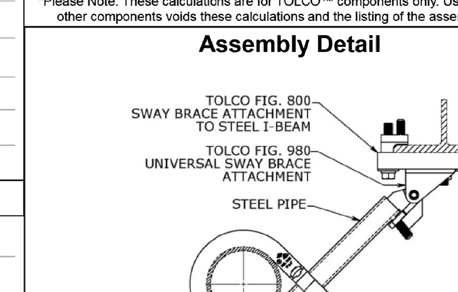

Brace Identification on Plans LATERAL STEEL BLDG B
Orientation of Brace Lateral

Braced Pipe: 4" Sch.10 Steel Pipe

Load Information

Size and Type of Pipe	Total Length	Total Calculated Load
4" Sch.10 Steel Pipe (101.6 mm)	20ft (6.1 m)	276 lbs (125 kg)
1.5" Sch.40 Steel Pipe (38.1 mm)	64.5ft (19.7 m)	272 lbs (123 kg)
1.25" Sch.40 Steel Pipe (31.75 mm)	59.9ft (18.3 m)	205 lbs (93 kg)
1" Sch.40 Steel Pipe (25.4 mm)	33ft (10.1 m)	79 lbs (36 kg)
Percentage added for Fittings and Sprinklers	15%	125 lbs (56.7 kg)
Total Adjusted Load of all pipe within Zone of Influence		957 lbs (434 kg)

{TOLBrace™ Version 8} Use of TOLBrace™ is subject to terms and conditions per the end user license agreement

TOLBrace™ Seismic Calculations

Project Address: Fillmore HS CTE
555 Central Ave.
Fillmore, CA 93015
Job # 18-26

EATON Powering Business Worldwide

Calculations based on 2016 NFPA Pamphlet #13

Brace Information

Maximum Spacing	60' 0" (18.29 m)
Maximum Brace Length	7' 0" (2.13 m)
Bracing Material	1" Sch.40
Angle from Vertical	45° Min.
Least Rad. of Gyration	0.42" (11 mm)
L/R Value	200
Max Horizontal Load	1310 lbs (594 kg)
Force Factor (Cp)	1.17

Other Requirements - FM Approved Loads

TOLCO™ Brace Components

TOLCO™ Component Fig. Number	Adjusted Load
Fig. 4LA Clamp	970 lbs (440 kg)
Fig.980 Universal Swivel	1970 lbs (894 kg)

*Calculation Based on CONCENTRIC Loading
*Please Note: These calculations are for TOLCO™ components only. Use of any other components voids these calculations and the listing of the assembly.

Fastener Information

Fastener Orientation	NFPA Type B
Maximum Load	1970 lbs (894 kg)
Diameter	N/A
Length	N/A
Type	Fig.800 Across Beam

Assembly Detail

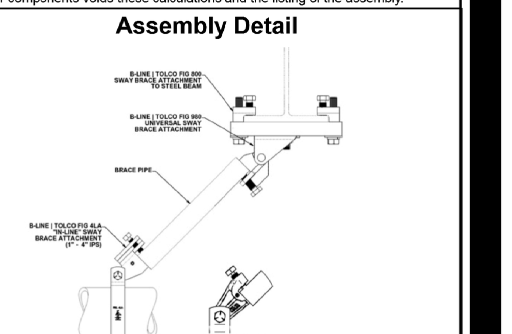

Brace Identification on Plans LONGITUDINAL STEEL BLDG B
Orientation of Brace Longitudinal

Braced Pipe: 4" Sch.10 Steel Pipe

Load Information

Size and Type of Pipe	Total Length	Total Calculated Load
4" Sch.10 Steel Pipe (101.6 mm)	60ft (18.3 m)	827 lbs (375 kg)
Percentage added for Fittings and Sprinklers	15%	124 lbs (56.25 kg)
Total Adjusted Load of all pipe within Zone of Influence		951 lbs (431 kg)

{TOLBrace™ Version 8} Use of TOLBrace™ is subject to terms and conditions per the end user license agreement

---

CLASSIFIED C UL US
Classified by Underwriters Laboratories, Inc. to UL 1479 and CAN/ULC-S115

System No. W-L-1392

ANSI/UL1479 (ASTM E814)	CAN/ULC S115
F Ratings — 1 and 2 Hr (See Item 1)	F Ratings — 1 and 2 Hr (See Item 1)
T Rating — 0 Hr	FT Rating — 0 Hr
L Rating At Ambient - Less Than 1 CFM/sq ft	FH Ratings — 1 and 2 Hr (See Item 1)
L Rating At 400 F - 4 CFM/sq ft	FTH Rating — 0 Hr
	L Rating At Ambient - Less Than 1 CFM/sq ft
	L Rating At 400 F - 4 CFM/sq ft

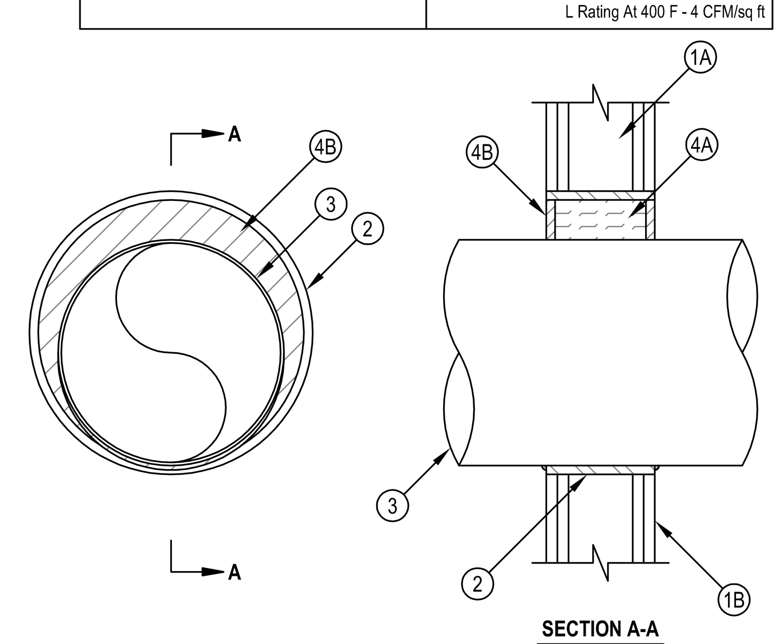

1. Wall Assembly — The 1 or 2 hr fire-rated gypsum board/stud wall assembly shall be constructed of the materials and in the manner described in the individual U400, V400 or W400 Series Wall or Partition Designs in the UL Fire Resistance Directory and shall include the following construction features:
   A. Studs — Wall framing shall consist of min 3-5/8 in. (92 mm) wide steel studs spaced max 24 in. (610 mm) OC.
   B. Gypsum Board* — Min 5/8 in. (16 mm), gypsum board. Max diam of opening shall is 16 in. (406 mm).
   The hourly F, FH Ratings of the firestop system are equal to the hourly fire rating of the wall assembly in which it is installed.
2. Steel Sleeve — Nom 16 in. (406 mm) diam (or smaller) Schedule 40 (or lighter) steel sleeve friction fitted into opening. Length of steel sleeve to be equal to the thickness of wall.
3. Through Penetrants — One metallic pipe, tubing or conduit to be installed concentrically or eccentrically within opening. The annular space between the pipes and conduits and the edges of the opening shall be min 0 in. (0 mm, point contact) to max 3-7/8 in. (98 mm). Through penetrant to be rigidly supported on both sides of wall assembly. The following types and sizes of through penetrants may be used:
   A. Steel Pipe — Nom 12 in. (305 mm) diam (or smaller) Schedule 10 (or heavier) steel pipe.
   B. Iron Pipe — Nom 12 in. (305 mm) diam (or smaller) cast or ductile iron pipe.
   C. Copper Tubing — Nom 6 in. (152 mm) diam (or smaller) Type L (or heavier) copper tube.
   D. Copper Pipe — Nom 6 in. (152 mm) diam (or smaller) Regular (or heavier) copper pipe.
   E. Conduit — Nom 6 in. (152 mm) diam (or smaller) electrical metallic tubing (EMT) or rigid steel conduit.
4. Firestop System — The firestop system shall consist of the following:
   A. Packing Material — In 2 hr rated wall assemblies, min 5-1/8 in. (130 mm) thickness of min 4 pcf (64 kg/m3) mineral wool batt insulation firmly packed into opening as a permanent form. In 1 hr rated wall assemblies, min 3-7/8 in. (130 mm) thickness of min 4 pcf (64 kg/m3) mineral wool batt insulation firmly packed into opening as a permanent form. Packing material to be recessed from both surfaces of wall to accommodate the required thickness of fill material.
   B. Fill Void or Cavity Materials* — Sealant — Min 1/2 in. (13 mm) thickness of fill material applied within the annulus, flush with both surfaces of wall. Min 1/4 in. (6 mm) diam bead of fill material applied to the through penetrant/steel sleeve interface at the point contact locations on both sides of the wall.
   HILTI CONSTRUCTION CHEMICALS, DIV OF HILTI INC — FS-ONE Sealant, FS-ONE MAX Intumescent Sealant

* Indicates such products shall bear the UL or cUL Certification Mark for jurisdictions employing the UL or cUL Certification (such as Canada), respectively.

HILTI Hilti Firestop Systems

Reproduced by HILTI, Inc. Courtesy of Underwriters Laboratories, Inc. January 26, 2015

GYP-WALL FIRE STOP PENETRATION

NO SCALE SHOWN ON PLAN AS — 7 / FP4.1

CLASSIFIED C UL US
Classified by Underwriters Laboratories, Inc. to UL 1479 and CAN/ULC-S115

System No. C-AJ-1154

ANSI/UL1479 (ASTM E814)	CAN/ULC S115
F Rating — 3 Hr	F Rating — 3 Hr
T Rating —1/4 Hr	FT Rating — 1/4 Hr
L Rating At Ambient — Less Than 1 CFM/sq ft	FH Rating — 3 Hr
L Rating At 400 F — 4 CFM/sq ft	FTH Rating — 1/4 Hr
	L Rating At Ambient — Less Than 1 CFM/sq ft
	L Rating At 400 F — 4 CFM/sq ft

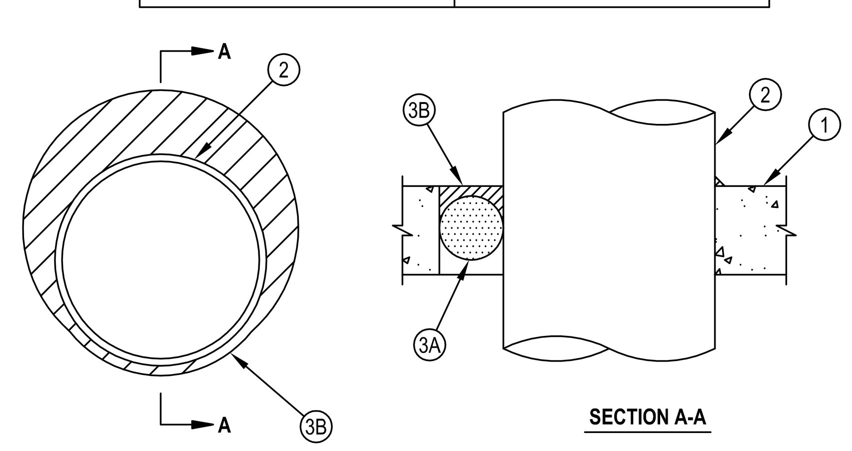

1. Floor or Wall Assembly — Min 4-1/2 in. (114 mm) thick reinforced lightweight or normal weight (100-150 pcf or 1600-2400 kg/m3) concrete. Wall may also be constructed of any UL Classified Concrete Blocks*. Max diam of opening is 14 in. (356 mm).
   See Concrete Blocks (CAZT) category in the Fire Resistance Directory for names of manufacturers.
2. Through-Penetrants — One metallic pipe, conduit or tubing to installed either concentrically or eccentrically within the firestop system. The annular space shall be min 0 in. to max 3-1/4 in. (83 mm). Pipe, conduit or tubing to be rigidly supported on both sides of wall assembly. The following types and sizes of metallic pipes, conduits or tubing may be used:
   A. Steel Pipe — Nom 10 in. (254 mm) diam (or smaller) Schedule 10 (or heavier) steel pipe.
   B. Conduit — Nom 4 in. (254 mm) diam (or smaller) steel electrical metallic tubing or steel conduit.
   C. Copper Tubing — Nom 4 in. (102 mm) diam (or smaller) Type L (or heavier) copper tubing.
   D. Copper Pipe — Nom 4 in. (102 mm) diam (or smaller) Regular (or heavier) copper pipe.
3. Firestop System — The firestop system shall consist of the following:
   A. Packing Material — Mineral wool batt insulation firmly packed into opening as a permanent form. Packing material to be recessed from top surface of floor or from both surfaces of wall to accommodate the required thickness of fill material. As an option to the above, backer rod and/or foamed plastic backer material may be used.
   B. Fill, Void or Cavity Material* — Sealant — Min 1/2 in. (13 mm) thickness of fill material applied within the annulus, flush with top surface of floor or with both surfaces of wall. At the point contact location between pipe and concrete, a min 1/2 in. (13 mm) diam bead of fill material shall be applied at the concrete/pipe interface on the top surface of floor and on both surfaces of wall.
   HILTI CONSTRUCTION CHEMICALS, DIV OF HILTI INC — FS-ONE Sealant or FS-ONE MAX Intumescent Sealant

* Indicates such products shall bear the UL or cUL Certification Mark for jurisdictions employing the UL or cUL Certification (such as Canada), respectively.

HILTI Hilti Firestop Systems

Reproduced by HILTI, Inc. Courtesy of Underwriters Laboratories, Inc. January 06, 2015

CONC. FIRE STOP PENETRATION

NO SCALE SHOWN ON PLAN AS — 6 / FP4.1

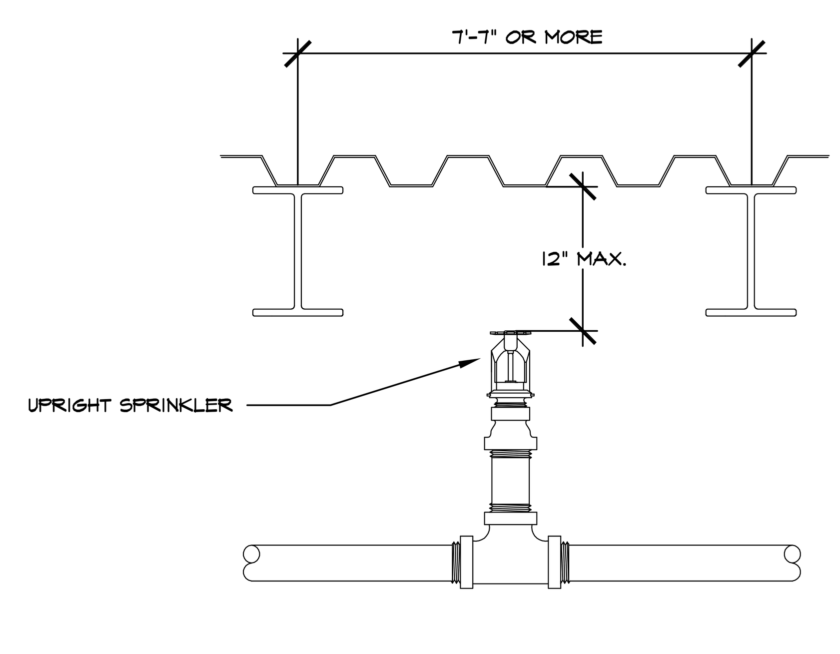

UNOBSTRUCTED CONSTRUCTION SPRINKLER CLEARANCES

NOT TO SCALE — 5 / FP-4.1

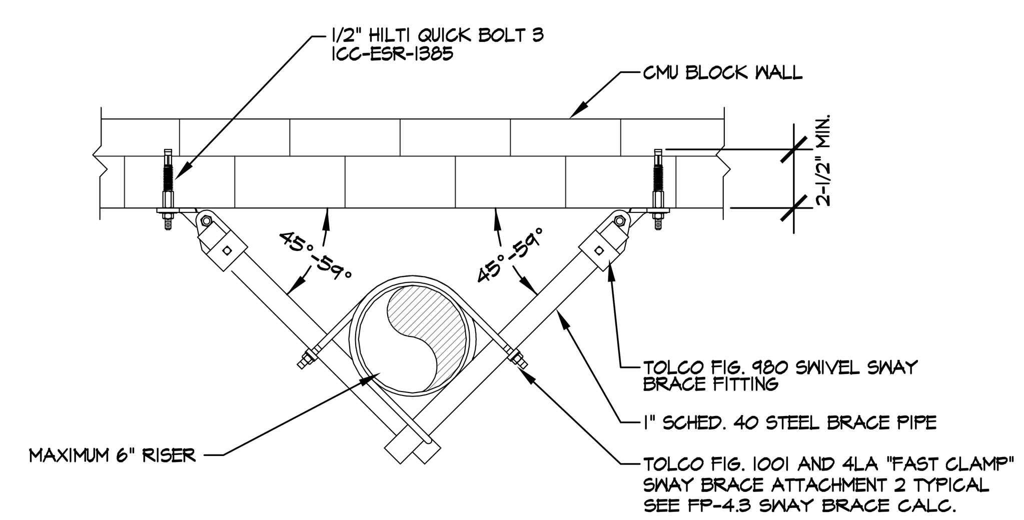

4-WAY EQB TO CMU WALL (BLDG. A)

NO SCALE SHOWN ON PLAN AS — 4 / FP-4.1

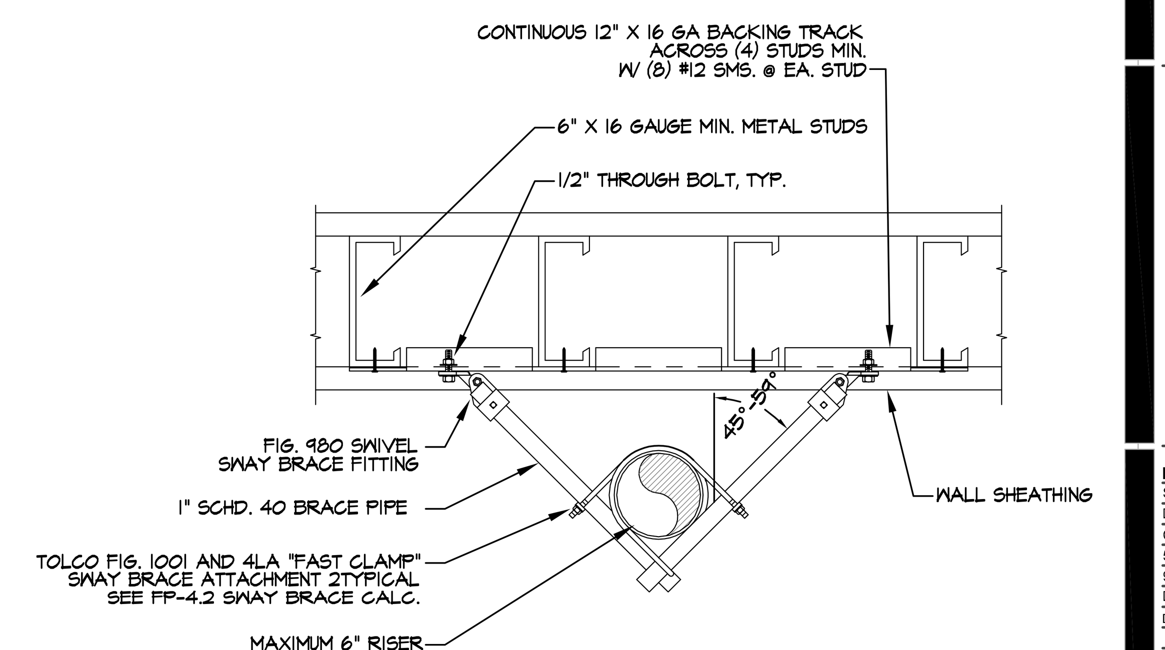

4-WAY SEISMIC RISER BRACE TO METAL STUD WALL (BLDG B.)

NO SCALE SHOWN ON PLAN AS — 3 / FP-4.1

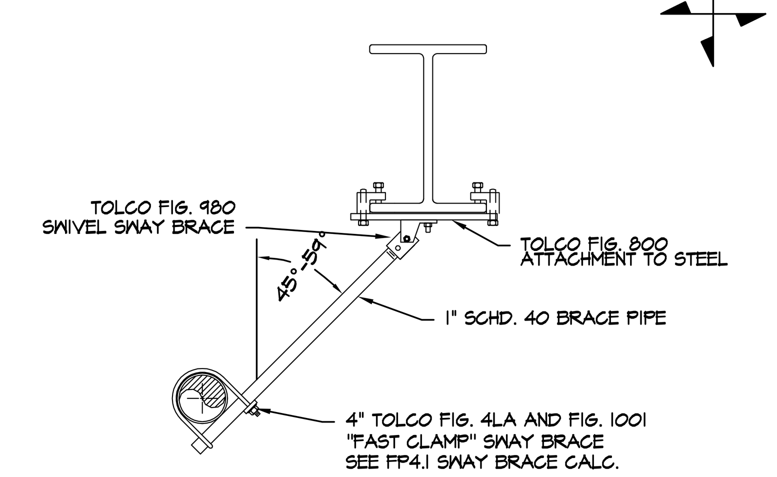

LATERAL EQB PERPENDICULAR TO BEAM

NOT TO SCALE SHOWN ON PLAN AS — 2 / FP4.1

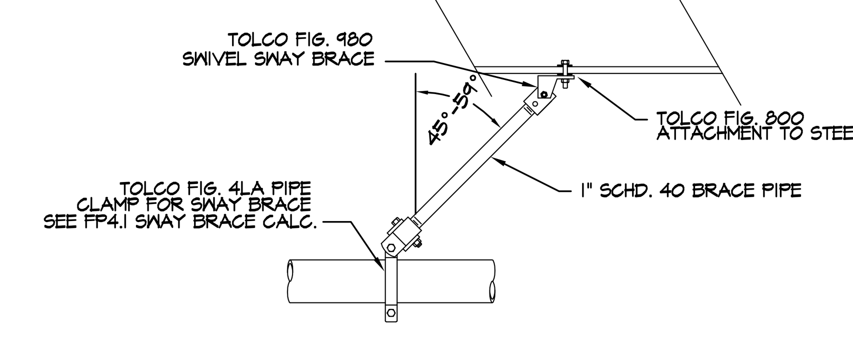

LONGITUDINAL EQB PARALLEL TO BEAM

NOT TO SCALE SHOWN ON PLAN AS — 1 / FP4.1

IDENTIFICATION STAMP
DIV. OF THE STATE ARCHITECT
APP. 03-119532 INC:
REVIEWED FOR
SS ☑ FLS ☑ ACS ☑
DATE: 6/24/19

WESTGROUP DESIGNS
ARCHITECTURE | PLANNING | INTERIOR DESIGN

19520 Jamboree Road | Suite 100
Irvine | California | 92612
949.250.0880 | FAX 949.250.0882
www.westgroupdesigns.com

PROTECTION DESIGN AND CONSULTING
2851 Camino Del Rio S. # 210
San Diego, California 2108
www.protectiondesign.com
phone 619.255.8964
fax 619.255.9547

FILLMORE HIGH SCHOOL - NEW CTE BUILDINGS
FILLMORE UNIFIED SCHOOL DISTRICT
555 Central Ave. Fillmore, CA. 93015

ISSUED FOR:

SCHEMATIC DESIGN	11/16/2017
DESIGN DEVELOPMENT	09/21/2018
CONSTRUCTION DOCUMENTS	12/07/2018
50% CD	11/09/2018
95% CD	12/10/2018
DSA SUBMITTAL	12/21/2018
DSA BACKCHECK	05/08/2019

REVISIONS:

NOT FOR CONSTRUCTION

REGISTRATION/SIGNATURE:
REGISTERED PROFESSIONAL ENGINEER JONATHON S. MITCHELL FP 1559 Exp. 6/30/19 FIRE PROTECTION STATE OF CALIFORNIA
DATE: Dec 19, 2018

SHEET TITLE:
DETAILS

SHEET NUMBER:
FP-4.1

WD PROJ. #	DRAWN BY:	CHECKED	DATE
18413	MH	Checker	12/21/18

© WESTGROUP DESIGNS, INC.

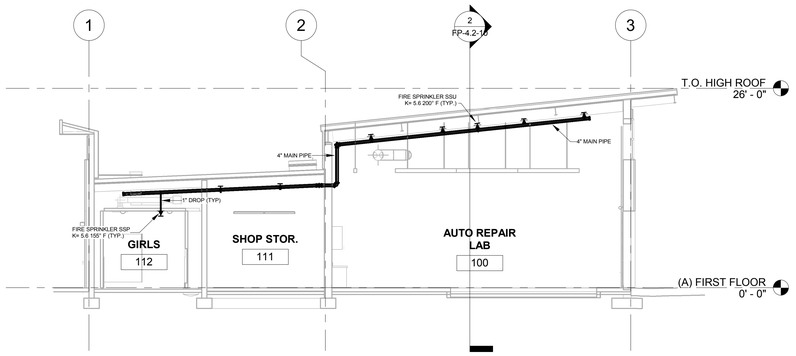

SECTION 1 BLDG. A
1/8" = 1'-0"

0' 4' 8' 16' 32'

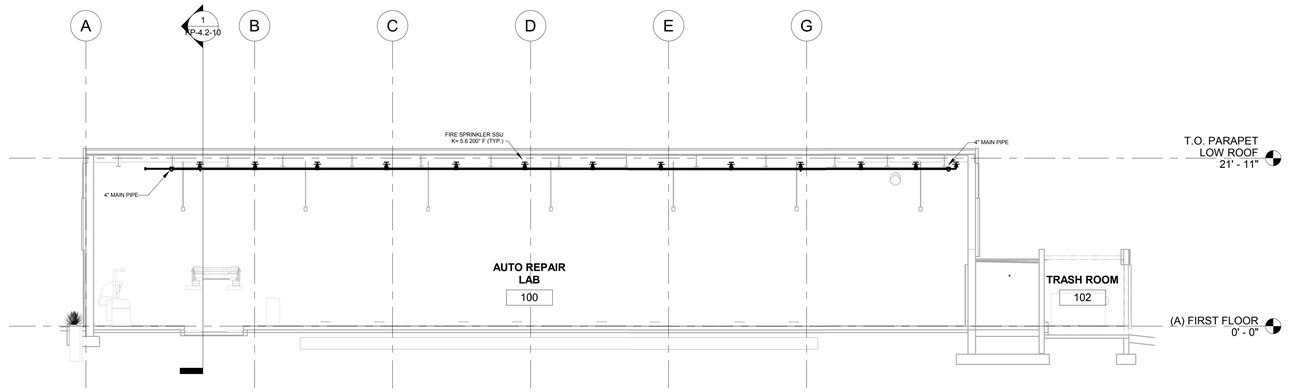

SECTION 2 BLDG. A
1/8" = 1'-0"

0' 4' 8' 16' 32'

IDENTIFICATION STAMP
DIV. OF THE STATE ARCHITECT
APP. 03-119532 INC:
REVIEWED FOR
SS ☑ FLS ☑ ACS ☑
DATE: 6/24/19

WESTGROUP DESIGNS
ARCHITECTURE | PLANNING | INTERIOR DESIGN
19520 Jamboree Road | Suite 100
Irvine | California | 92612
949.250.0880 | FAX 949.250.0882
www.westgroupdesigns.com

PROTECTION
DESIGN AND
CONSULTING
2851 Camino Del Rio S. # 210
San Diego, California 2108
www.protectiondesign.com
phone 619.255.8964
fax 619.255.9547

FILLMORE HIGH SCHOOL - NEW CTE BUILDINGS

FILLMORE UNIFIED SCHOOL DISTRICT

555 Central Ave. Fillmore, CA. 93015

ISSUED FOR:

SCHEMATIC DESIGN	11/16/2017
DESIGN DEVELOPMENT	09/21/2018
CONSTRUCTION DOCUMENTS	12/07/2018
50% CD	11/09/2018
95% CD	12/10/2018
DSA SUBMITTAL	12/21/2018
DSA BACKCHECK	05/08/2019

RE:VISIONS:

NOT FOR CONSTRUCTION

REGISTRATION/SIGNATURE:

REGISTERED PROFESSIONAL ENGINEER
JOHN S. AVILA
FP 1559
Exp. 6/30/20
FIRE PROTECTION
STATE OF CALIFORNIA

DATE: Dec 19, 2018

SHEET TITLE:

SECTIONS

SHEET NUMBER:

FP-4.2-10

WD PROJ. #	DRAWN BY:	CHECKED	DATE
18413	MH	Checker	12/21/18

© WESTGROUP DESIGNS, INC.

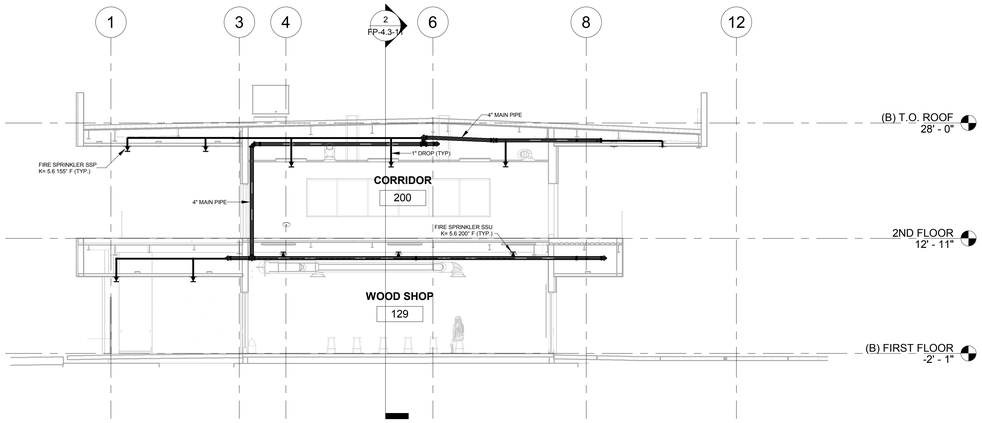

SECTION 1 BLDG. B
1/8" = 1'-0"

0' 4' 8' 16' 32'

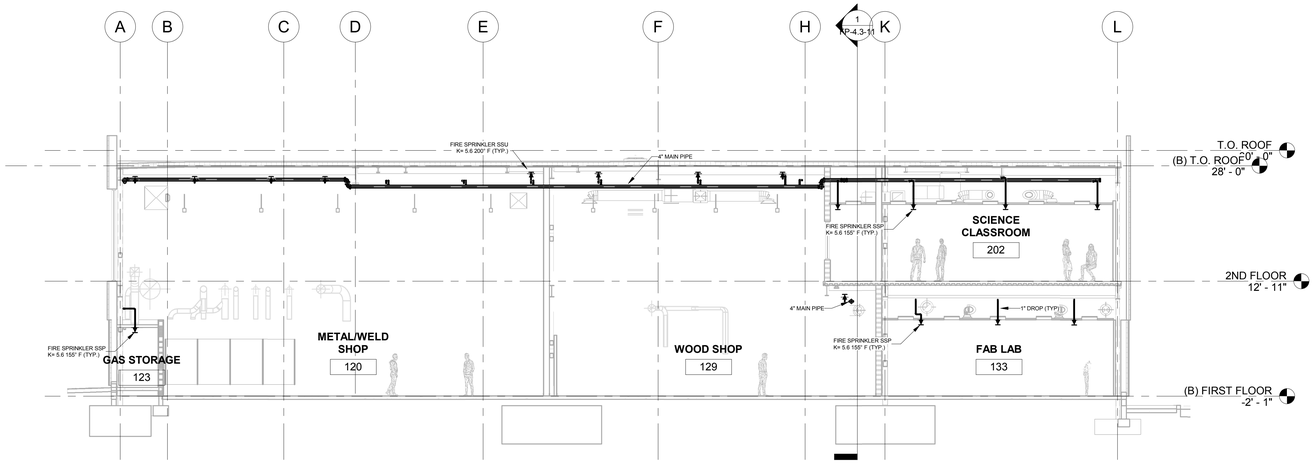

SECTION 2 BLDG. B
1/8" = 1'-0"

0' 4' 8' 16' 32'

IDENTIFICATION STAMP
DIV. OF THE STATE ARCHITECT
APP. 03-119532 INC:
REVIEWED FOR
SS ☑ FLS ☑ ACS ☑
DATE: 6/24/19

WESTGROUP DESIGNS
ARCHITECTURE | PLANNING | INTERIOR DESIGN
19520 Jamboree Road | Suite 100
Irvine | California | 92612
949.250.0880 | FAX 949.250.0882
www.westgroupdesigns.com

PROTECTION DESIGN AND CONSULTING
2851 Camino Del Rio S. # 210
San Diego, California 2108
www.protectiondesign.com
phone 619.255.8964
fax 619.255.9547

FILLMORE HIGH SCHOOL - NEW CTE BUILDINGS

FILLMORE UNIFIED SCHOOL DISTRICT

555 Central Ave. Fillmore, CA. 93015

ISSUED FOR:

SCHEMATIC DESIGN	11/16/2017
DESIGN DEVELOPMENT	09/21/2018
CONSTRUCTION DOCUMENTS	12/07/2018
50% CD	11/09/2018
95% CD	12/10/2018
DSA SUBMITTAL	12/21/2018
DSA BACKCHECK	05/08/2019

RE/VISIONS:

NOT FOR CONSTRUCTION

REGISTRATION/SIGNATURE:

REGISTERED PROFESSIONAL ENGINEER
JAMES S. AVERY
FP 1559
Exp. 6/30/19
FIRE PROTECTION
STATE OF CALIFORNIA

DATE: Dec 19, 2018

SHEET TITLE:

SECTIONS

SHEET NUMBER:

FP-4.3-11

WD PROJ. #	DRAWN BY:	CHECKED	DATE
18413	MH	Checker	12/21/18

© WESTGROUP DESIGNS, INC.